DATA SHEET

CEL

BIPOLAR ANALOG INTEGRATED CIRCUIT

μPC8112TB

SILICON MMIC 1st FREQUENCY DOWN-CONVERTER FOR CELLULAR/CORDLESS TELEPHONE

DESCRIPTION

The μPC8112TB is a silicon monolithic integrated circuit designed as 1st frequency down-converter for cellular/cordless telephone receiver stage. This IC consists of mixer and local amplifier. The μPC8112TB features high impedance output of open collector. Similar ICs of the μPC2757TB and μPC2758TB feature low impedance output of emitter follower. These TB suffix ICs which are smaller package than conventional T suffix ICs contribute to reduce your system size.

The μPC8112TB is manufactured using the 20 GHz f_T NESAT™III silicon bipolar process. This process uses silicon nitride passivation film and gold electrodes. These materials can protect chip surface from external pollution and prevent corrosion/migration. Thus, this IC has excellent performance, uniformity and reliability.

FEATURES

- Excellent RF performance : IIP_3 = –7 dBm@f_{RFin} = 1.9 GHz (reference)
  IM_3 = –88 dBm@P_{RFin} = –38 dBm, 1.9 GHz (reference)
- Similar conversion gain to μPC2757 and lower noise figure than μPC2758
- Minimized carrier leakage : RF_{LO} = –80 dB@f_{RFin} = 900 MHz (reference)
  RF_{LO} = –55 dB@f_{RFin} = 1.9 GHz (reference)
- High linearity : $P_{O(sat)}$ = –2.5 dBm TYP.@f_{RFin} = 900 MHz
  $P_{O(sat)}$ = –3 dBm TYP.@f_{RFin} = 1.9 GHz
- Low current consumption : I_{CC} = 8.5 mA TYP.
- Supply voltage : V_{CC} = 2.7 to 3.3 V
- High-density surface mounting: 6-pin super minimold package

APPLICATIONS

- 1.5 to 1.9 GHz cellular/cordless telephone (PHS, DECT, PDC1.5G and so on)
- 800 to 900 MHz cellular telephone (PDC800M and so on)

ORDER INFORMATION

Part Number	Package	Markings	Supplying Form
μPC8112TB-E3-A	6-pin super minimold	C2K	Embossed tape 8 mm wide. Pin 1, 2, 3 face the tape perforation side. Qty 3kpcs/reel.

Remark To order evaluation samples, please contact your local nearby sales office (Part number for sample order: μPC8112TB-A).

Caution Electro-static sensitive devices

Document No. P12808EJ3V0DS00 (3rd edition)
Date Published November 2000 N CP(K)

The mark ▲ shows major revised points.

CONTENTS

1. PIN CONNECTIONS

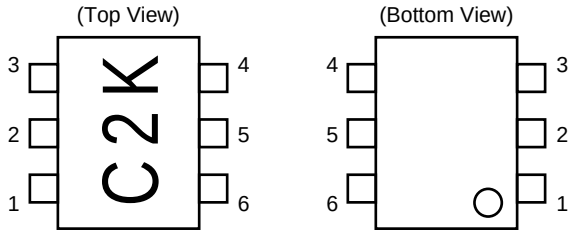

Pin No.	Pin Name
1	RFinput
2	GND
3	LOinput
4	PS
5	V_{CC}
6	IFoutput

2. PRODUCT LINE-UP (T_A = +25°C, V_{CC} = V_{PS} = 3.0 V, Z_S = Z_L = 50 Ω)

Items / Part Number	No RF I_{CC} (mA)	900 MHz SSB · NF (dB)	1.5 GHz SSB · NF (dB)	1.9 GHz SSB · NF (dB)	900 MHz CG (dB)	1.5 GHz CG (dB)	1.9 GHz CG (dB)	900 MHz IIP_3 (dBm)	1.5 GHz IIP_3 (dBm)	1.9 GHz IIP_3 (dBm)
μPC2757T	5.6	10	10	13	15	15	13	–14	–14	–12
μPC2757TB										
μPC2758T	11	9	10	13	19	18	17	–13	–12	–11
μPC2758TB										
μPC8112T	8.5	9	11	11	15	13	13	–10	–9	–7
μPC8112TB										

Items / Part Number	900 MHz $P_{O(sat)}$ (dBm)	1.5 GHz $P_{O(sat)}$ (dBm)	1.9 GHz $P_{O(sat)}$ (dBm)	900 MHz RF_{LO} (dB)	1.5 GHz RF_{LO} (dB)	1.9 GHz RF_{LO} (dB)	IF Output Configuration	Package
μPC2757T	–3	–	–8	–	–	–	Emitter follower	6-pin minimold
μPC2757TB								6-pin super minimold
μPC2758T	+1	–	–4	–	–	–		6-pin minimold
μPC2758TB								6-pin super minimold
μPC8112T	–2.5	–3	–3	–80	–57	–55	Open collector	6-pin minimold
μPC8112TB								6-pin super minimold

Remark Typical performance. Please refer to ELECTRICAL CHARACTERISTICS in detail.

Cautions 1. The μPC2757 and μPC2758's IIP_3 are calculated with ΔIM_3 = 3 which is the same IM_3 inclination as μPC8112. On the other hand, OIP_3 of Standard characterisitcs in page 7 is cross point IP.

2. This document is to be specified for μPC8112TB. The other part number mentioned in this document should be referred to the data sheet of each part number.

3. INTERNAL BLOCK DIAGRAM

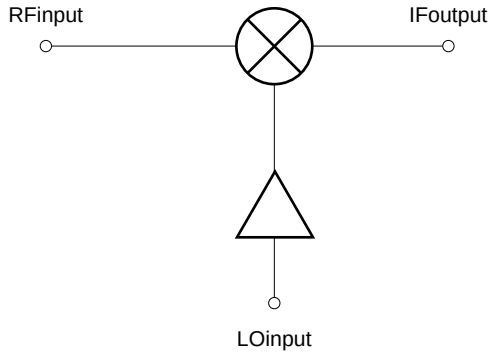

4. SYSTEM APPLICATION EXAMPLE

Digital cordless phone

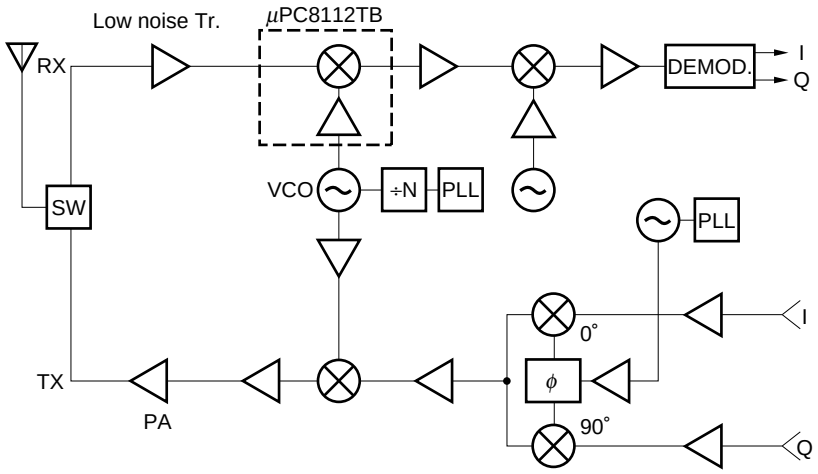

5. PIN EXPLANATION

Pin No.	Pin Name	Applied Voltage (V)	Pin Voltage (V)	Function and Application	Internal Equivalent Circuit
1	RFinput	–	1.2	RF input pin of mixer. This mixer is designed as double balanced type. This pin should be externally coupled to front stage with DC cut capacitor.	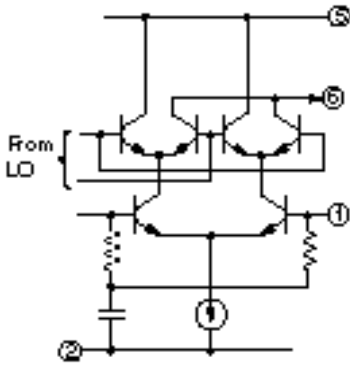
2	GND	GND	–	Ground pin. This pin must be connected to the system ground. Form the ground pattern as wide as possible and the truck length as short as possible to minimize ground impedance.	
5	V_{CC}	2.7 to 3.3	–	Supply voltage pin. This pin should be connected with bypass capacitor (example: 1 000 pf) to minimize ground impedance.	
6	IFoutput	as same as V_{CC} voltage through external inductor	–	IF output pin. This output is configured with open collector of high impedance. This pin should be externally equipped with matching circuit of inductor should be selected as small resistance and high frequency use.	
3	LOinput	–	1.4	Input pin of local amplifier. This amplifier is designed as differential type. This pin should be externally coupled to local signal source with DC cut capacitor. Recommendable input level is –15 to 0 dBm.	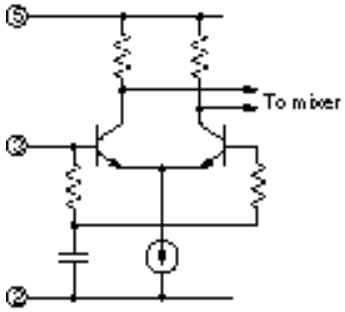
4	PS	V_{CC} or GND	–	Power save control pin. This pin can control ON/OFF operation with bias as follows; [illegible]	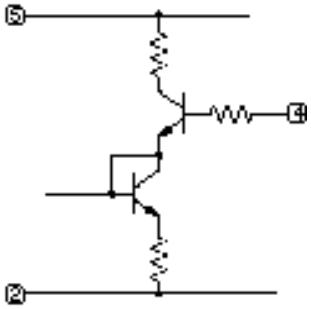

	Bias: V	Operation
V_{PS}	≥ 2.5	ON
	0 to 0.5	OFF

6. ABSOLUTE MAXIMUM RATINGS

Parameter	Symbol	Conditions	Ratings	Unit
Supply Voltage	V_{CC}	T_A = +25°C, 5 pin and 6 pin	3.6	V
Total Circuit Current	I_{CC}	T_A = +25°C	77.7	mA
★ Total Power Dissipation	P_D	Mounted on double sided copper clad 50 × 50 × 1.6 mm epoxy glass PWB (T_A = +85°C)	270	mW
Operating Ambient Temperature	T_A		–40 to +85	°C
Storage Temperature	T_{stg}		–55 to +150	°C

7. RECOMMENDED OPERATING RANGE

Parameter	Symbol	MIN.	TYP.	MAX.	Unit	Remarks
Supply Voltage	V_{CC}	2.7	3.0	3.3	V	5 pin and 6 pin should be applied to same voltage.
Operating Ambient Temperature	T_A	–40	+25	+85	°C	
LO Input Power	P_{LOin}	–15	–10	0	dBm	Zs = 50 Ω
RF Input Frequency	f_{RFin}	0.8	1.9	2.0	GHz	
IF Output Frequency	f_{IFout}	100	250	300	MHz	With external matching

8. ELECTRICAL CHARACTERISTICS (Unless otherwise specified, T_A = +25°C, V_{CC} = V_{PS} = V_{IFout} = 3.0 V, P_{LOin} = –10 dBm, Z_S = Z_L = 50 Ω)

Parameter	Symbol	Test Conditions	MIN.	TYP.	MAX.	Unit
Circuit Current	I_{CC}	No input signal	4.9	8.5	11.7	mA
Circuit Current at Power Save Mode	$I_{CC(PS)}$	V_{CC} = 3.0 V, V_{PS} = 0.5 V	–	–	0.1	μA
Conversion Gain	CG	f_{RFin} = 900 MHz, f_{LOin} = 1 000 MHz f_{RFin} = 1.9 GHz, f_{LOin} = 1.66 GHz	11.5 9.5	15 13	17.5 15.5	dB
SSB Noise Figure	SSB•NF	f_{RFin} = 900 MHz, f_{LOin} = 1 000 MHz f_{RFin} = 1.9 GHz, f_{LOin} = 1.66 GHz	– –	9.0 11.2	11 13.2	dB
Saturated Output Power	$P_{O(sat)}$	f_{RFin} = 900 MHz, f_{LOin} = 1 000 MHz f_{RFin} = 1.9 GHz, f_{LOin} = 1.66 GHz (P_{RFin} = –10 dBm each)	–6.5 –7	–2.5 –3	– –	dBm

9. STANDARD CHARACTERISTICS FOR REFERENCE
(T_A = +25°C, V_{CC} = V_{PS} = V_{IFout} = 3.0 V, P_{LOin} = –10 dBm, Z_S = Z_L = 50 Ω)

Parameter	Symbol	Test Conditions	Reference	Unit
Conversion Gain	CG	f_{RFin} = 1.5 GHz, f_{LOin} = 1.6 GHz	13	dB
SSB Noise Figure	SSB•NF	f_{RFin} = 1.5 GHz, f_{LOin} = 1.6 GHz	11	dB
LO Leakage at RF pin	LO_{RF}	f_{RFin} = 900 MHz, f_{LOin} = 1 000 MHz f_{RFin} = 1.5 GHz, f_{LOin} = 1.6 GHz f_{RFin} = 1.9 GHz, f_{LOin} = 1.66 GHz	–45 –46 –45	dB
RF Leakage at LO pin	RF_{LO}	f_{RFin} = 900 MHz, f_{LOin} = 1 000 MHz f_{RFin} = 1.5 GHz, f_{LOin} = 1.6 GHz f_{RFin} = 1.9 GHz, f_{LOin} = 1.66 GHz	–80 –57 –55	dB
LO Leakage at IF pin	LO_{if}	f_{RFin} = 900 MHz, f_{LOin} = 1 000 MHz f_{RFin} = 1.5 GHz, f_{LOin} = 1.6 GHz f_{RFin} = 1.9 GHz, f_{LOin} = 1.66 GHz	–32 –33 –30	dB
3rd Order Distortion Input Intercept Point[Note]	IIP_3	f_{RFin} = 900 MHz, f_{LOin} = 1 000 MHz f_{RFin} = 1.5 GHz, f_{LOin} = 1.6 GHz f_{RFin} = 1.9 GHz, f_{LOin} = 1.66 GHz	–10 –9 –7	dBm

Note IIP_3 is determined by comparing two method; theoretical calculation and cross point of IM_3 curve.
$IIP_3 = (\Delta IM_3 \times P_{in} + CG - IM_3) \div (\Delta IM_3 - 1)$ (dBm) [ΔIM_3: IM_3 curve inclination in linear range]
μPC8112's ΔIM_3 is closer to 3 (theoretical inclination) than μPC2757 and μPC2758 of conventional ICs.

10. TEST CIRCUIT

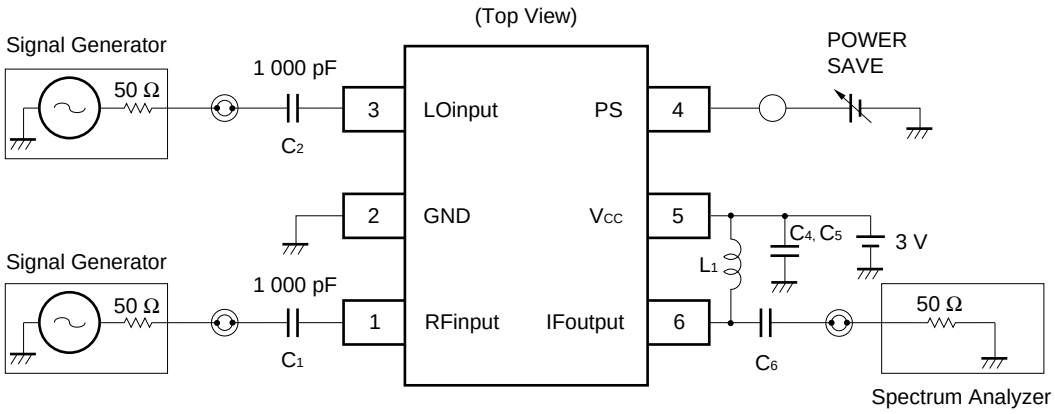

★ 11. ILLUSTRATION OF THE TEST CIRCUIT ASSEMBLED ON EVALUATION BOARD

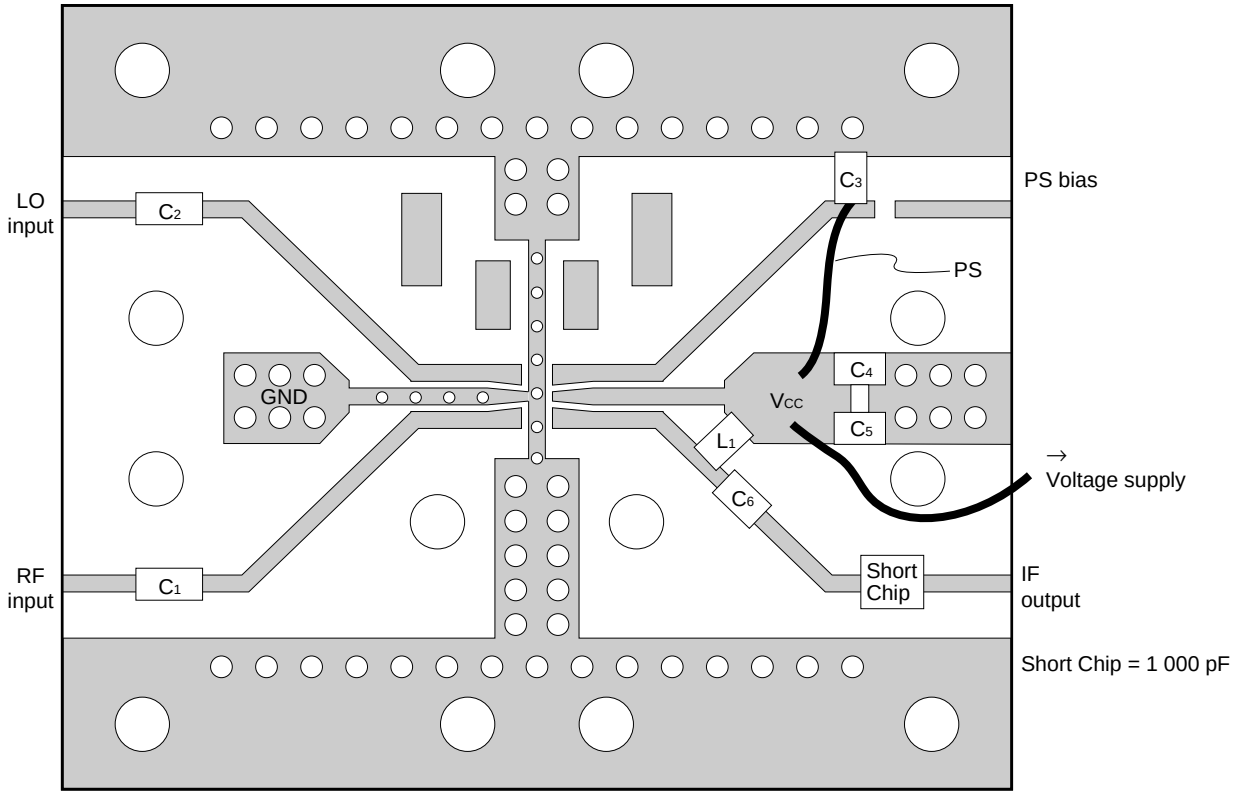

Component Number	IF 100 MHz Matching	IF 240 MHz Matching	Remarks
C_1 to C_5	1 000 pF	1 000 pF	CHIP C
C_6	5 pF	2 pF	CHIP C
L_1	330 nH	84 nH	CHIP L

EVALUATION BOARD CHARACTERS AND NOTE

(1) 35 μm thick double-sided copper clad 35 × 42 × 0.4 mm polyimide board
(2) Back side: GND pattern
(3) Solder plated patterns
(4) ∘○: Through holes
(5) To mount C_6, pattern should be cut.

Caution Test circuit or print pattern in this sheet is for testing IC characteristics. They are not an application circuit or recommended system circuit.
In the case of actual system application, external circuits including print pattern and matching circuit constant of output port should be designed in accordance with IC's S-parameters and environmental components.

Remark External circuits of the IC can be referred to following application notes.
- USAGE AND APPLICATION CHARACTERISTICS OF μPC2757, μPC2758, AND μPC8112, 3-V POWER SUPPLY, 1.9-GHz FREQUENCY DOWN-CONVERTER ICS FOR MOBILE COMMUNICATION (Document No. P11997E)

12. TYPICAL CHARACTERISTICS (T_A = +25°C, unless otherwise specified, measured on test circuits)

12.1 Without Signals

CIRCUIT CURRENT vs. SUPPLY VOLTAGE

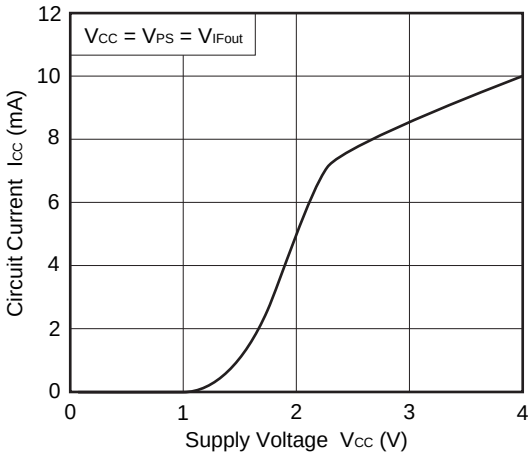

CIRCUIT CURRENT vs. SUPPLY VOLTAGE

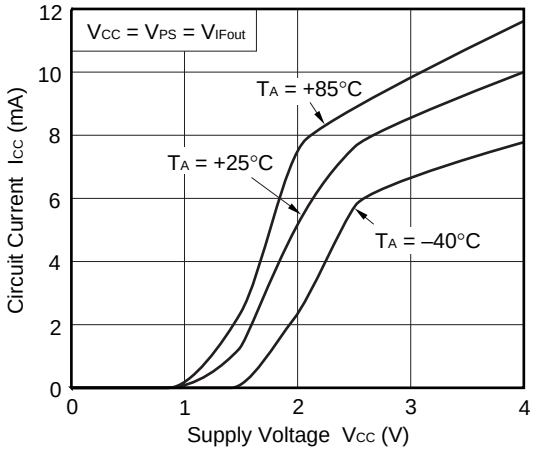

CIRCUIT CURRENT vs.
PS PIN APPLIED VOLTAGE

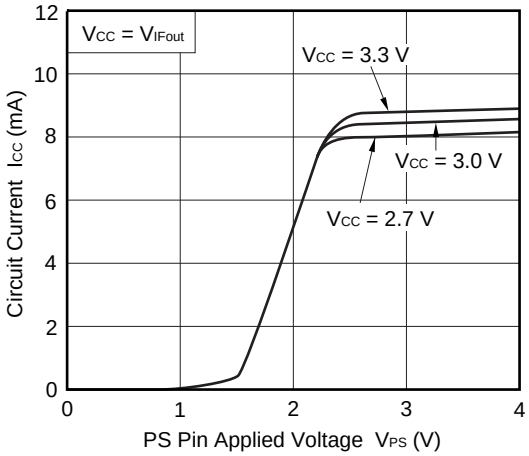

12.2 IF 100 MHz Matching (f_{RFin} = 900 MHz)

IF OUTPUT POWER vs. RF INPUT POWER

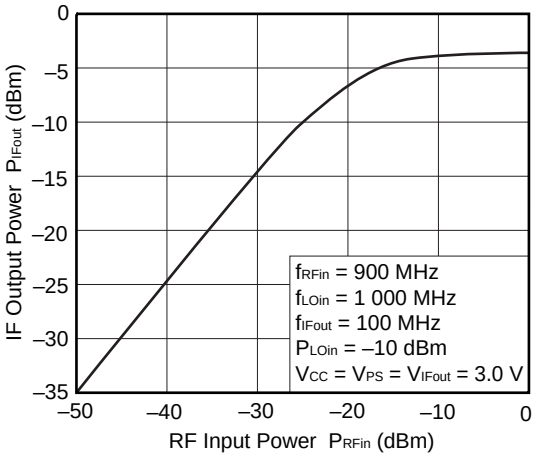

IF OUTPUT POWER vs. RF INPUT POWER

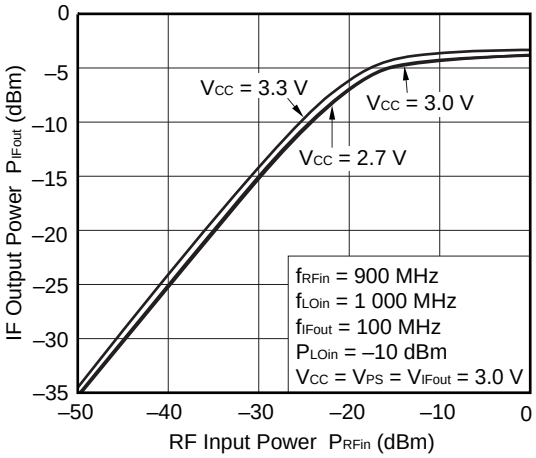

IF OUTPUT POWER OF EACH TONE, IM_3 vs. RF INPUT POWER

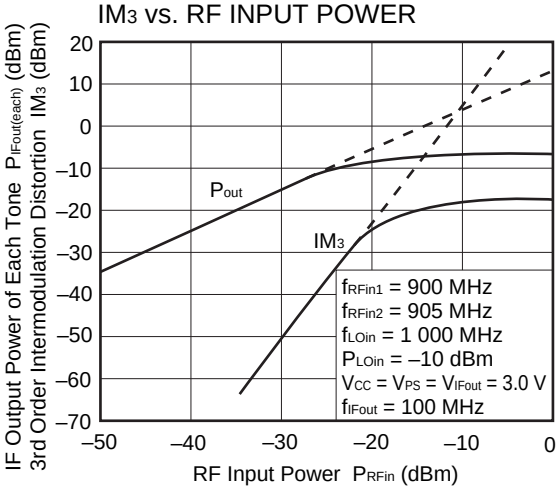

CONVERSION GAIN vs. LO INPUT POWER

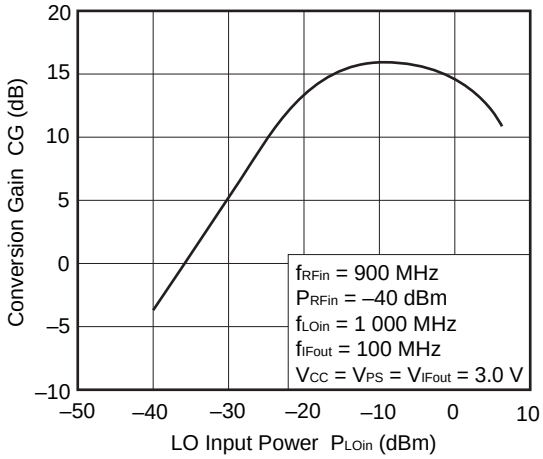

CONVERSION GAIN vs. SUPPLY VOLTAGE

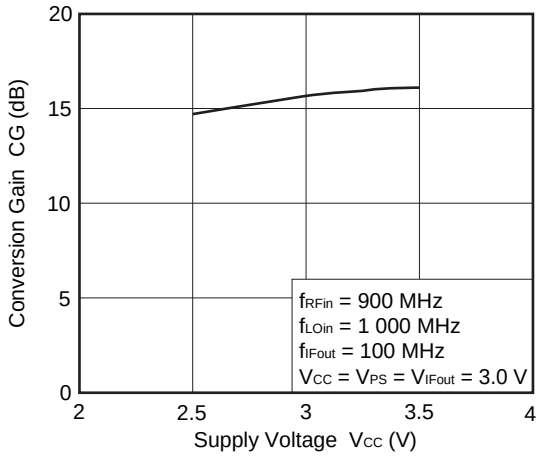

SSB NOISE FIGURE vs. LO INPUT POWER

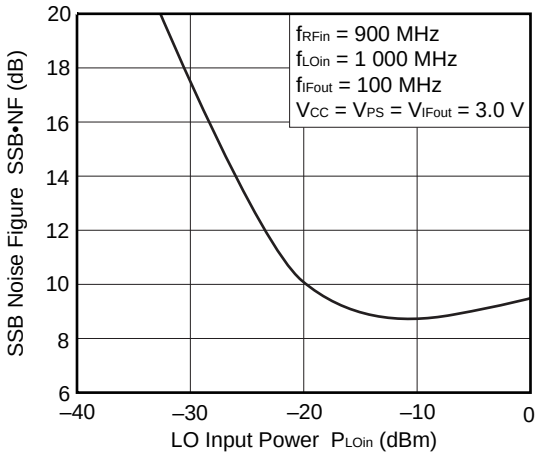

CONVERSION GAIN vs.
IF OUTPUT FREQUENCY

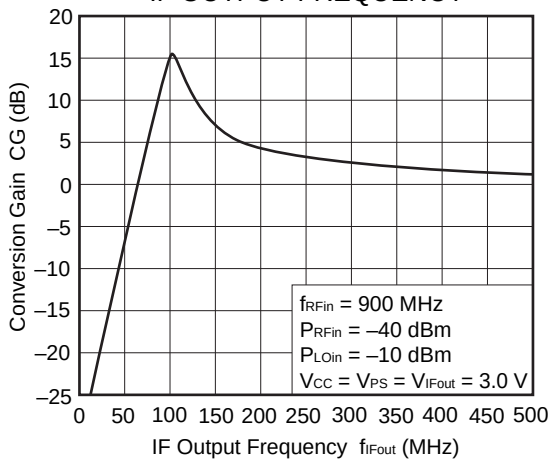

12.3 IF 100 MHz Matching (f_{RFin} = 1.5 GHz)

IF OUTPUT POWER vs. RF INPUT POWER

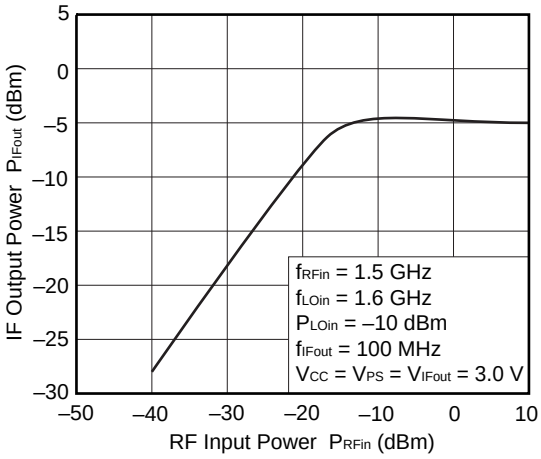

IF OUTPUT POWER vs. RF INPUT POWER

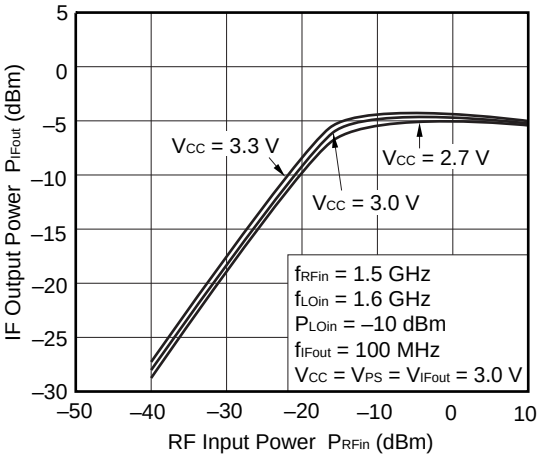

IF OUTPUT POWER OF EACH TONE, IM3 vs. RF OUTPUT POWER

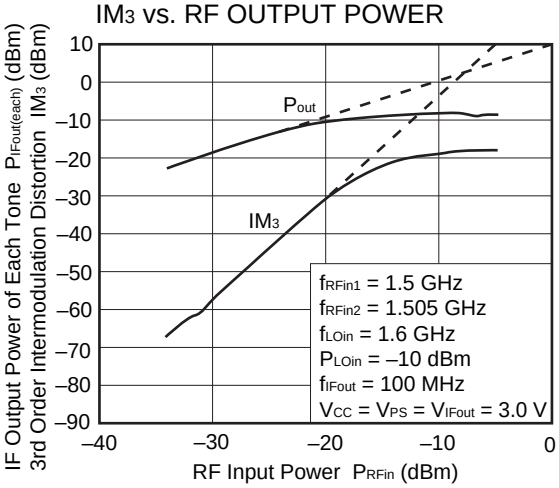

CONVERSION GAIN vs. LO INPUT POWER

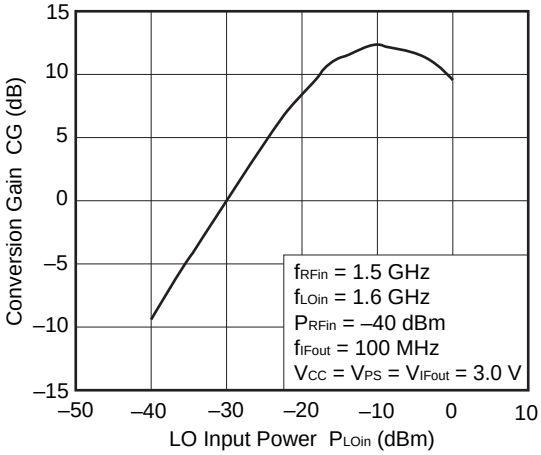

CONVERSION GAIN vs. SUPPLY VOLTAGE

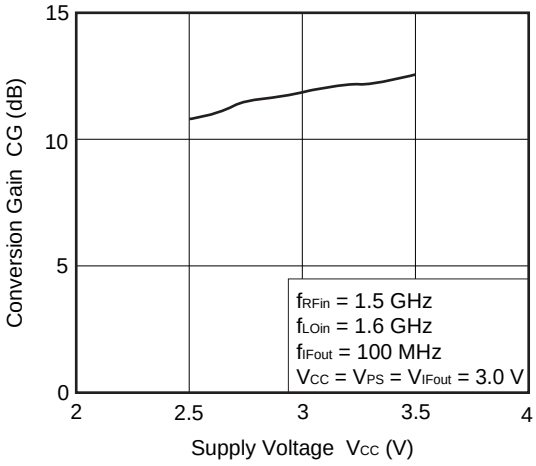

SSB NOISE FIGURE vs. LO INPUT POWER

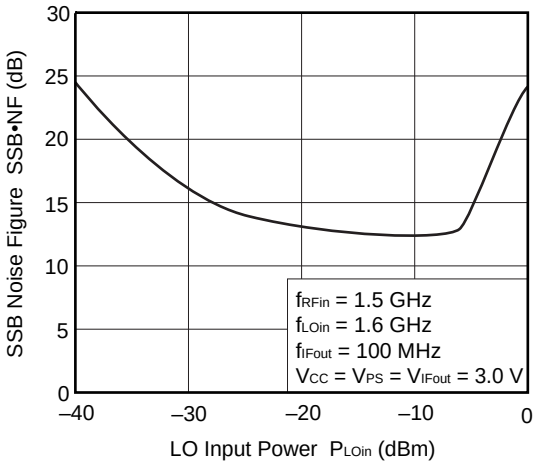

12.4 IF 240 MHz Matching

IF OUTPUT POWER vs. RF INPUT POWER

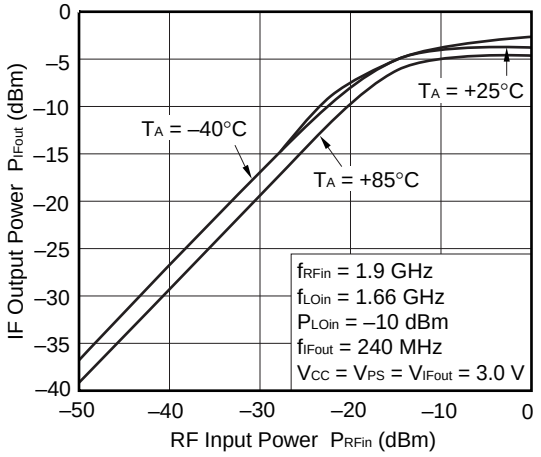

IF OUTPUT POWER vs. RF INPUT POWER

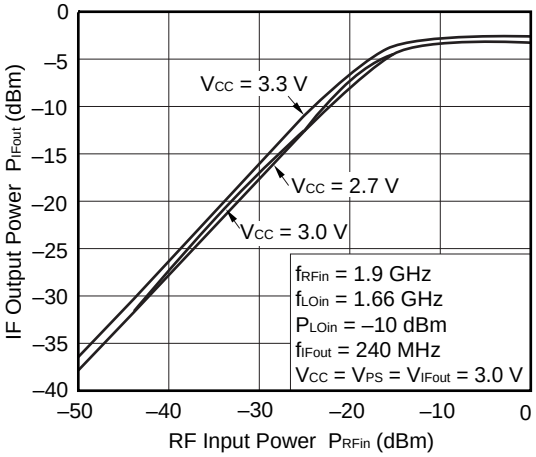

IF OUTPUT POWER OF EACH TONE, IM3 vs. RF INPUT POWER

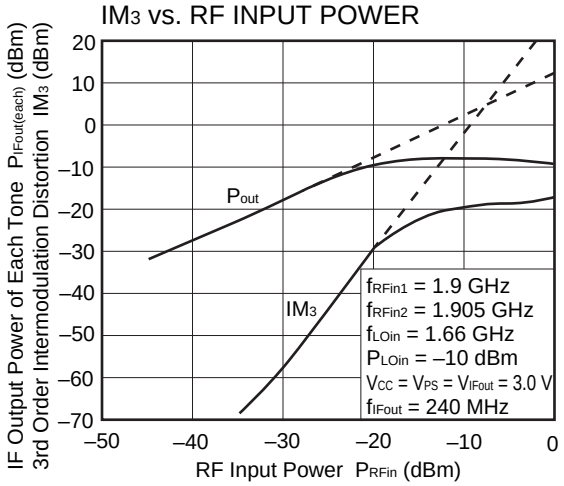

CONVERSION GAIN vs. LO INPUT POWER

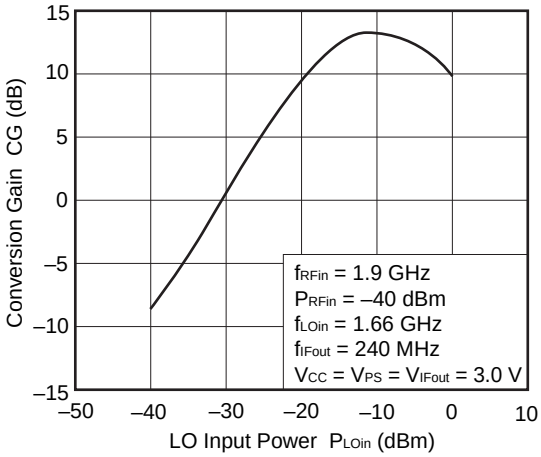

CONVERSION GAIN vs. SUPPLY VOLTAGE

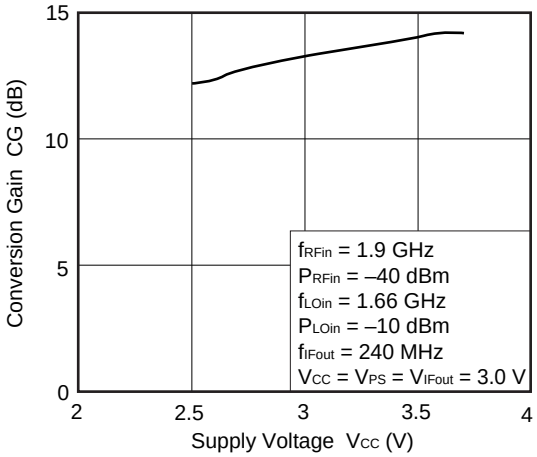

SSB NOISE FIGURE vs. LO INPUT POWER

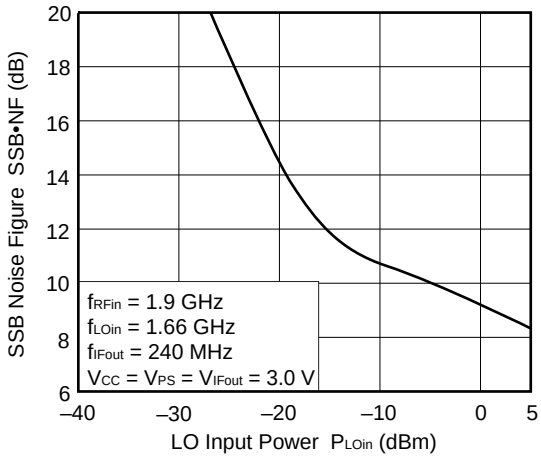

CONVERSION GAIN vs.
IF OUTPUT FREQUENCY

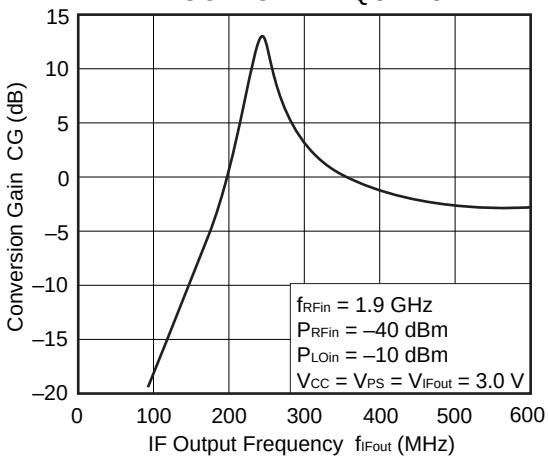

SSB NOISE FIGURE vs.
OPERATING AMBIENT TEMPERATURE

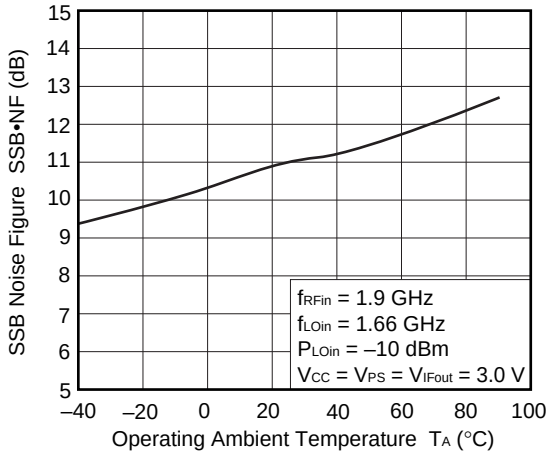

Remark The graphs indicate nominal characteristics.

13. S-PARAMETERS

13.1 Calibrated on pin of DUT

S_{11} Z
REF 1.0 Units
1 200.0 mUnits/
hp 62.711 Ω –224.07 Ω
MARKER 1
500.0 MHz

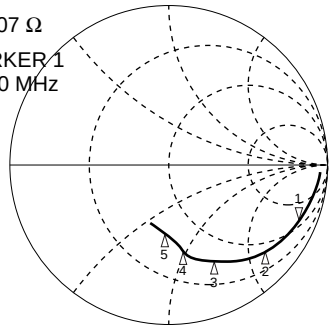

START 0.050000000 GHz
STOP 3.000000000 GHz

RF PORT
$V_{CC} = V_{PS} = 3.0V$
1:500 MHz 62.711 Ω-j224.07 Ω
2:900 MHz 48.977 Ω-j219.18 Ω
3:1 500 MHz 40.641 Ω-j129.94 Ω
4:1 900 MHz 37.422 Ω-j101.51 Ω
5:2 500 MHz 34.801 Ω-j74.141 Ω

S_{11} Z
REF 1.0 Units
1 200.0 mUnits/
hp 76.656 Ω –421.67 Ω
MARKER 1
500.0 MHz

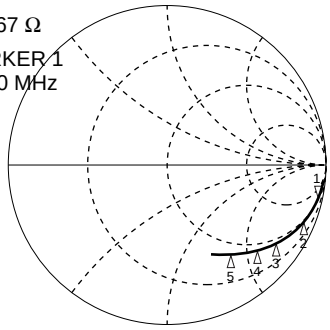

START 0.050000000 GHz
STOP 3.000000000 GHz

RF PORT
$V_{CC} = 3.0V$ $V_{PS} = GND$
1:500 MHz 76.656 Ω-j421.67 Ω
2:900 MHz 53.102 Ω-j234.55 Ω
3:1 500 MHz 44.844 Ω-j140.82 Ω
4:1 900 MHz 40.898 Ω-j109.73 Ω
5:2 500 MHz 38.063 Ω-j80.547 Ω

S_{11} Z
REF 1.0 Units
1 200.0 mUnits/
hp 169.11 Ω –429.98 Ω
MARKER 1
500.0 MHz

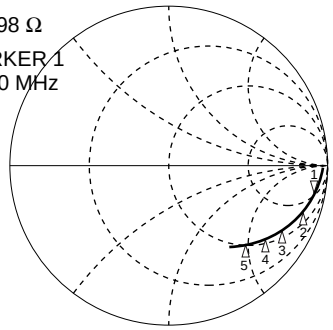

START 0.050000000 GHz
STOP 3.000000000 GHz

LO PORT
$V_{CC} = V_{PS} = 3.0V$
1:500 MHz 169.11 Ω-j429.98 Ω
2:900 MHz 91.875 Ω-j263.7 Ω
3:1 500 MHz 60.781 Ω-j162.56 Ω
4:1 900 MHz 56.789 Ω-j125.66 Ω
5:2 500 MHz 49.652 Ω-j97.602 Ω

S_{11} Z
REF 1.0 Units
1 200.0 mUnits/
hp 135.53 Ω –575.06 Ω
MARKER 1
500.0 MHz

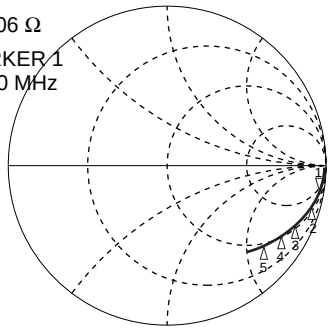

START 0.050000000 GHz
STOP 3.000000000 GHz

LO PORT
$V_{CC} = 3.0V$ $V_{PS} = GND$
1:500 MHz 135.53 Ω-j575.06 Ω
2:900 MHz 78.266 Ω-j337.66 Ω
3:1 500 MHz 55.883 Ω-j201.43 Ω
4:1 900 MHz 52.734 Ω-j159.63 Ω
5:2 500 MHz 44.262 Ω-j122.66 Ω

S_{22} Z
REF 1.0 Units
1 200.0 mUnits/
hp 201.00 Ω –1.7173 kΩ
MARKER 1
100.0 MHz

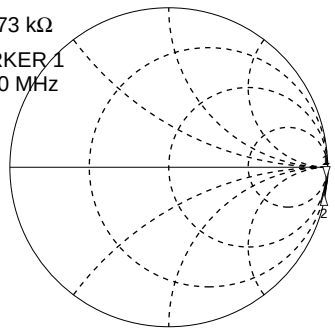

START 0.050000000 GHz
STOP 3.000000000 GHz

IF PORT
$V_{CC} = V_{PS} = 3.0V$
1:100 MHz 201.88 Ω-j1.7173 kΩ
2:240 MHz 92.094 Ω-j715.72 Ω

S_{22} Z
REF 1.0 Units
1 200.0 mUnits/
hp 056.56 Ω –1.7468 kΩ
MARKER 1
100.0 MHz

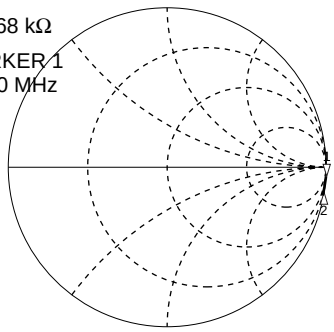

START 0.050000000 GHz
STOP 3.000000000 GHz

IF PORT
$V_{CC} = 3.0V$ $V_{PS} = GND$
1:100 MHz 56.56 Ω-j1.7468 kΩ
2:240 MHz 85.5 Ω-j722.22 Ω

13.2 IF Output Matching (V_{CC} = V_{PS} = V_{IFout} = 3.0 V) –on Test Circuit– (This S_{11} is monitored at IF connector on test circuit fixture)

IF 100 MHz MATCHING

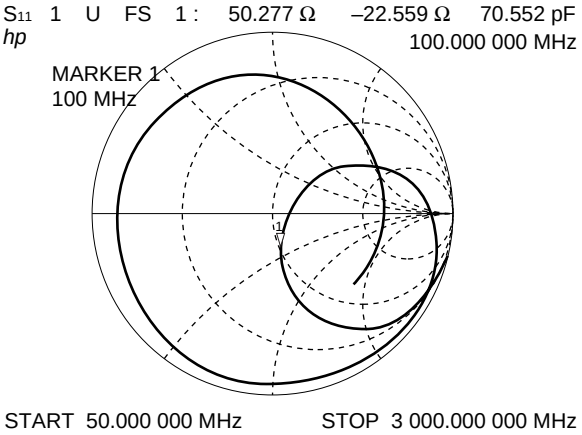

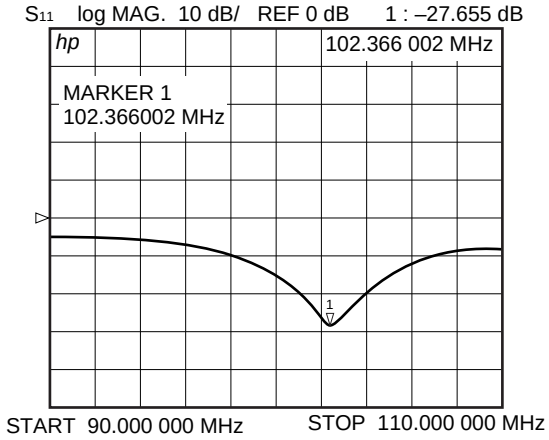

IF 240 MHz MATCHING

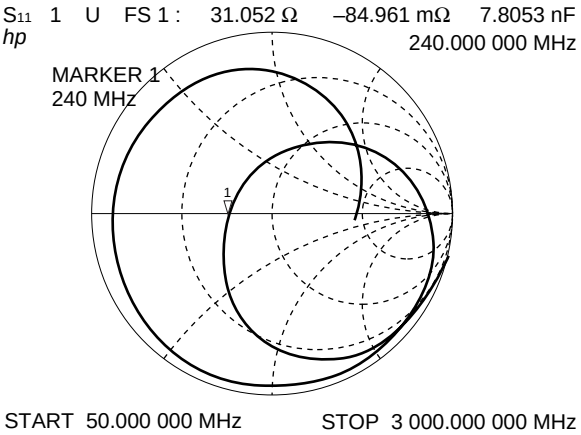

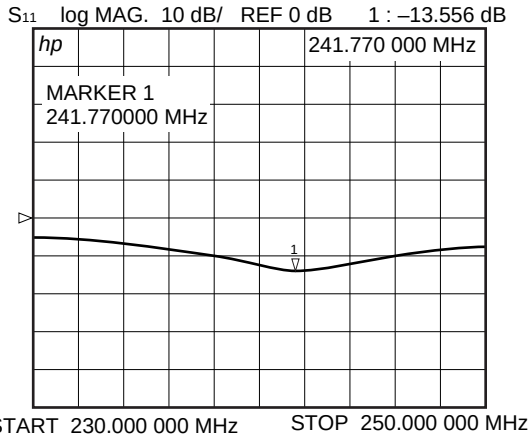

The data in this page are to make clear the test condition of impedance matched to next stage, not specify the recommended condition. The S_{11} smith charts of the test fixture setting IC are normalized to Z_O = 50 Ω, because the IC's load is the measurement equipment of 50 Ω impedance.

In your use, the output return loss value can be helpful information to adjust your circuit matching to next stage.

14. PACKAGE DIMENSIONS

6-PIN SUPER MINIMOLD (UNIT: mm)

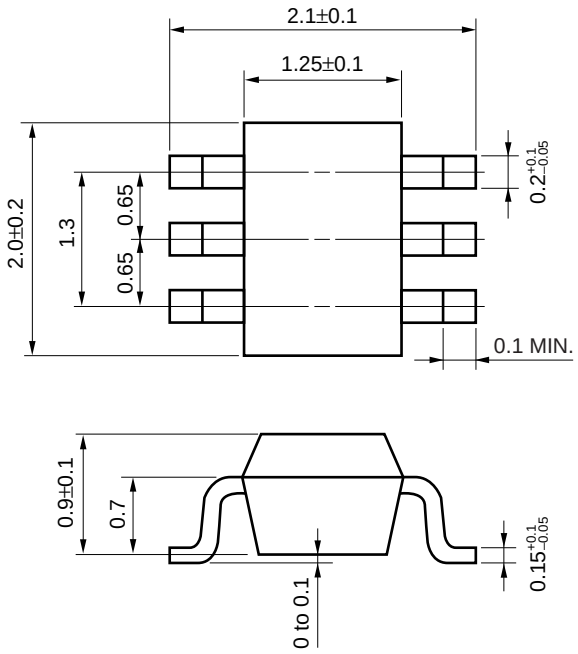

15. NOTE ON CORRECT USE

(1) Observe precautions for handling because of electro-static sensitive devices.

(2) Form a ground pattern as widely as possible to minimize ground impedance (to prevent undesired oscillation). Keep the track length of the ground pins as short as possible.

(3) The bypass capacitor (example: 1 000 pF) should be attached to the V_{CC} pin.

(4) The matching circuit should be externally attached to the IF output pin.

(5) The DC cut capacitor must be each attached to the input and output pins.

16. RECOMMENDED SOLDERING CONDITIONS

This product should be soldered under the following recommended conditions. For soldering methods and conditions other than those recommended below, contact your NEC sales representative.

Soldering Method	Soldering Condition	Recommended Condition Symbol
Infrared Reflow	Package peak temperature: 235°C or below Time: 30 seconds or less (at 210°C) Count: 3, Exposure limit: None[Note]	IR35-00-3
VPS	Package peak temperature: 215°C or below Time: 40 seconds or less (at 200°C) Count: 3, Exposure limit: None[Note]	VP15-00-3
Wave Soldering	Soldering bath temperature: 260°C or below Time: 10 seconds or less Count: 1, Exposure limit: None[Note]	WS60-00-1
Partial Heating	Pin temperature: 300°C Time: 3 seconds or less (per side of device) Exposure limit: None[Note]	–

Note After opening the dry pack, keep it in a place below 25°C and 65% RH for the allowable storage period.

Caution Do not use different soldering methods together (except for partial heating).

For details of recommended soldering conditions for surface mounting, refer to information document SEMICONDUCTOR DEVICE MOUNTING TECHNOLOGY MANUAL (C10535E).