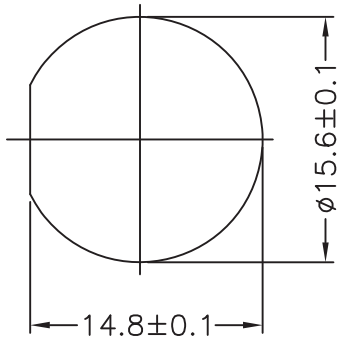

Recommended Panel Cut-Out

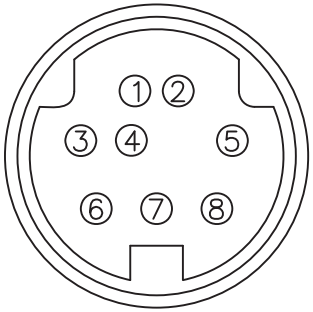

Pin Assignments
Front View

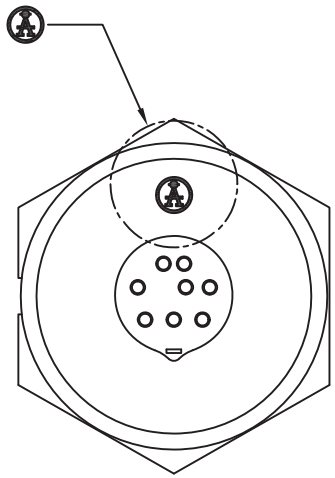

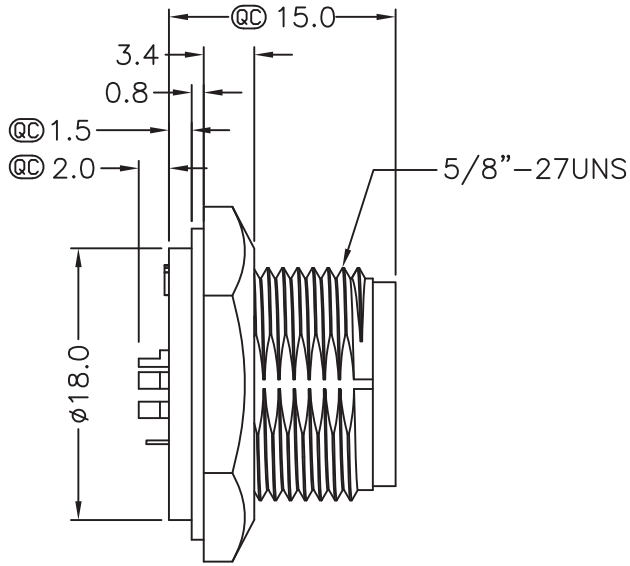

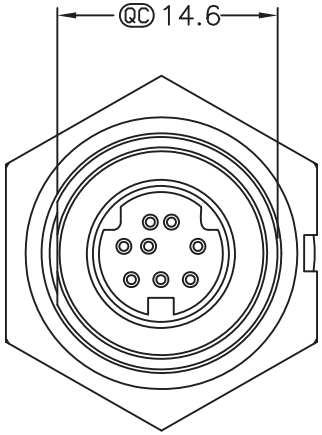

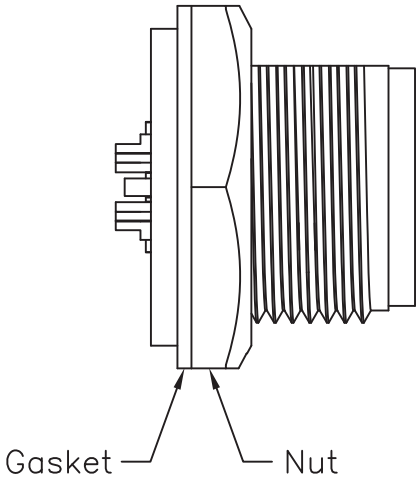

Material:

- Waterproof Rate: IP67
- Connector: Mini DIN 8Pin Male
- Nut: Nylon+GF
- Gasket: EPDM
- For panel thickness Max 4.0M
- Rated temperature: -20°C~+80°C

QC Quality Control: Important Dimension to check
Unit: MM±0.25MM

RoHS Complaint

Scale	1:1						Name	Item No. A-MD-08PMFS-WP-R
TOLERANCE								
X.X	±0.40				Drawn	12.01.11	Chappell	
X.XX	±0.25				Approved			Title Waterproof Mini DIN Connector - 8 Pin, Male connector, Female pin
X.XXX	±0.15							
Angle	±3°							Drawing No. rev00
			Modification	Date	Name			Replace / Sheet

ASSMANN WSW components