HSB Fuse Rated 32V

RoHS

Non-housed fuse strips for rated voltage up to 32 VDC. Current rating 35 A -175 A. Ring type lugs.

Sicherungsstreifen ohne Gehäuse für Nennspannungen bis 32 VDC.Nennstrom 35 A bis 175 A. Anschlüsse mit Bohrung.

Dimensions in mm / Maße in mm

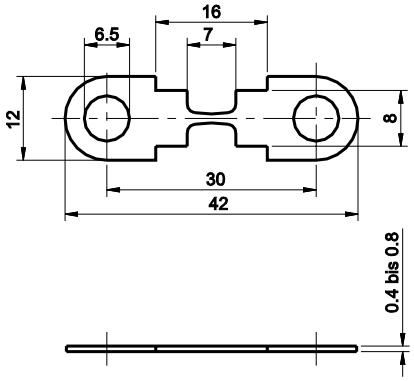

Specifications

Material: Zinc-alloy
Connections: Zinc-alloy
2 x M6 bolts, distance 30 mm
Starting torque: 4 Nm +/- 1 Nm

Pre-arcing Time - limits / Schmelzzeit-Grenzwerte DIN

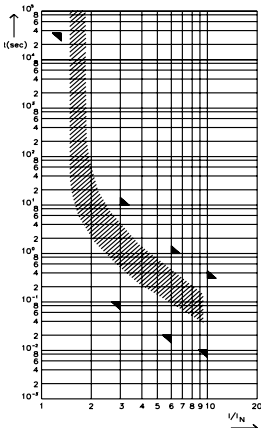

Fl = 1.00 (max. operating current: 1.0 x I_{rat} at 23°C)

Time-Current Characteristics / Schmelzzeit-Grenzwerte

% of Rating % des Nennstromes	Opening Time Min / Max (s) Schmelzcharakteristik Min / Max (s)
100	∞ / –
125	100 h / –
300	100 ms / 10 s
600	20 ms / 1 s
1000	10 ms / 300 ms

Part Number Artikel-Nr.	Current Rating Nennstrom	Typ. Voltage Drop Typ. Spannungsfall	Cold Resistance Kaltwiderstand	I^2t
156.5677.530_	30 A	44mV	1.33 mΩ	30–3800 A^2s
156.5677.540_	40 A	40mV	0.89 mΩ	40–11200 A^2s
156.5677.550_	50 A	44mV	0.72 mΩ	50–21300 A^2s
156.5677.560_	60 A	38mV	0.58 mΩ	60–41400 A^2s
156.5677.580_	80 A	40mV	0.43 mΩ	80–44800 A^2s
156.5677.611_	110 A	40mV	0.31 mΩ	110–13900 A^2s
156.5677.615_	150 A	52mV	0.23 mΩ	150–465000 A^2s
156.5677.617_	175 A	46mV	0.22 mΩ	175–560000 A^2s

Last figure of part number = packaging code, see Section “Packaging Index,” pg. 157.
Corresponding holder see Section “Fuse Holders.”

Mouser Electronics

Authorized Distributor

Click to View Pricing, Inventory, Delivery & Lifecycle Information:

Littelfuse:
156.5677.5301 156.5677.5302 156.5677.5402 156.5677.5601 156.5677.6151 156.5677.6111 156.5677.6152 156.5677.5802 156.5677.5502 156.5677.5501 156.5677.6171 156.5677.5602 156.5677.5401 156.5677.5801 156.5677.6172 156.5677.6112