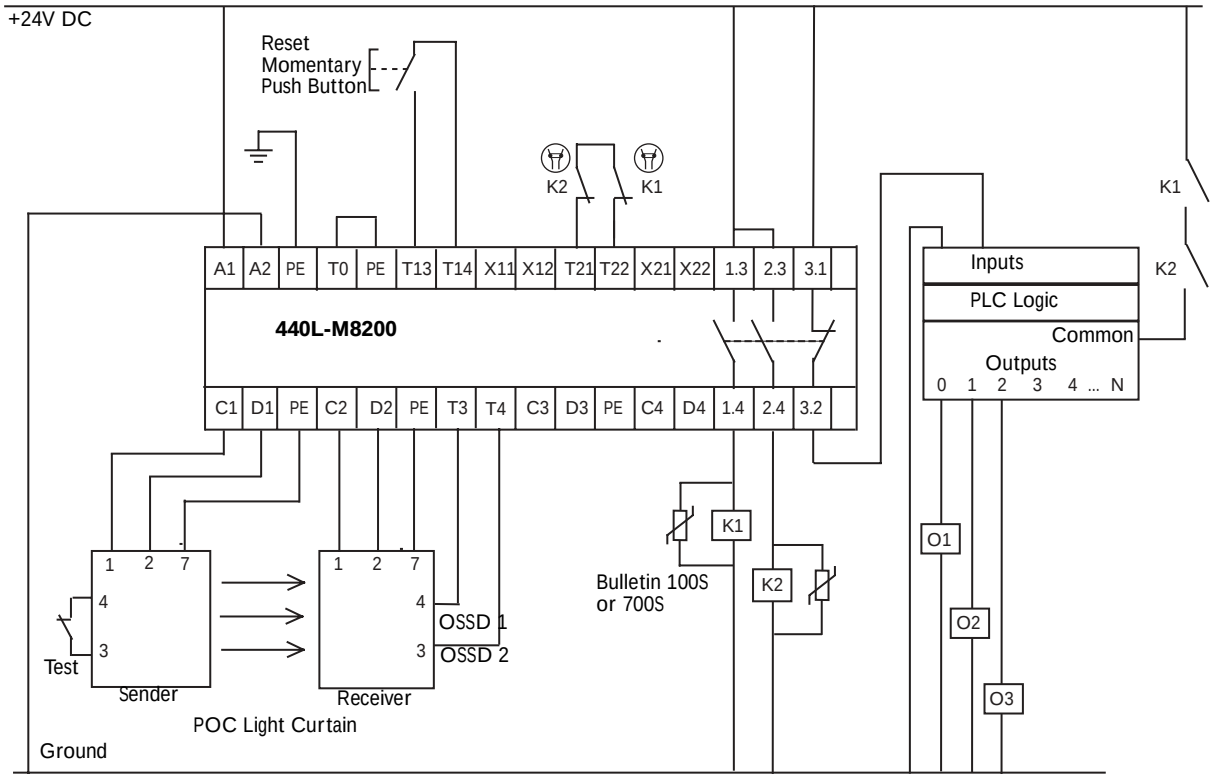

Circuit Status

The light curtain is not detecting the presence of any objects. The power to the PLC Output common terminal is OFF. The Reset switch on the 440L-8200 must be pressed to apply power to the PLC Output Module.

Operating Principle

The momentary reset button must be pressed to apply power to the PLC output module.
The PLC controls the operation of the machine.
When an object breaks the beam of the light curtain, the outputs from the light curtain receiver turn off. The 440L-M8200 detects the absence of the input signals at T3 and T4 and causes the K1 and K2 Bulletin 100 contactors (or Bulletin 700S relays) to drop out.
This disconnects power to the output module of the PLC.

Fault Detection

If either contactor K1 or K2 sticks ON, the PLC output module will be disconnected by the other contactor operating properly.
The 440L-M8200 relay will detect the stuck contactor because terminals T21 and T22 will be open.
The fault must be corrected and the 440L-M8200 reset in order to apply power to the PLC output module.

Comments

The contactors should be selected to meet the load requirements of the PLC output loads.
The N.C. auxiliary contact is fed into the PLC input, so the PLC knows when the light curtain has been activated.