# HF105F-4 (JQX-105F-4) MINIATURE HIGH POWER RELAY

File No.:E134517

File No.:R50050266

File No.:CQC02001001955

## Features

- 30A switching capability
- 2.5kV dielectric strength (between coil and contacts)
- Heavy load up to 7,200VA
- Class F insulation available
- Environmental friendly product (RoHS compliant)
- Outline Dimensions: (50.2 x 27.5 x 27.8) mm

## CONTACT DATA

| Contact arrangement | 1A | 1B | 1C (NO) | 1C (NC) |
|---|---|---|---|---|
| Contact resistance | 50mΩ (at 1A 24VDC) | | | |
| Contact material | $AgSnO_2$, AgCdO | | | |
| Max. switching capacity | 7200VA/560W | 3600VA/280W | 4800VA/560W | 2400VA/280W |
| Max. switching voltage | 277VAC/28VDC | | | |
| Max. switching current | 40A | 15A | 20A | 10A |
| HF105F-4 rating | 30A 240VAC<br>20A 28VDC | 15A 240VAC<br>10A 28VDC | 20A 240VAC<br>20A 28VDC | 10A 240VAC<br>10A 28VDC |
| HF105F-4L rating | 25A 240VAC<br>20A 28VDC | 15A 240VAC<br>10A 28VDC | 20A 240VAC<br>20A 28VDC | 10A 240VAC<br>10A 28VDC |
| Mechanical endurance | $1 \times 10^7$ OPS | | | |
| Electrical endurance | $1 \times 10^5$ OPS | | | |

## CHARACTERISTICS

| | | |
|---|---|---|
| Insulation resistance | | 1000MΩ (at 500VDC) |
| Dielectric strength | Between coil & contacts | 2500VAC 1min |
| | Between open contacts | 1500VAC 1min |
| Operate time (at nomi. volt.) | | 15ms max. |
| Release time (at nomi. volt.) | | 10ms max. |
| Ambient temperature | Class B | DC:-55˚C to 85˚C<br>AC:-55˚C to 60˚C |
| | Class F | DC:-55˚C to105˚C<br>AC:-55˚C to 85˚C |
| Shock resistance | Functional | $100m/s^2$ (10g) |
| | Destructive | $1000m/s^2$ (100g) |
| Vibration resistance | | 10Hz to 55Hz 1.5mm DA |
| Humidity | | 98%, 40˚C |
| Termination | | QC |
| Unit weight | | Approx. 36g |
| Construction | | Wash tight, Dust protected |

**Notes:** 1) The data shown above are initial values.
2) Please find coil temperature curve in the characteristic curves below.

## COIL

| | |
|---|---|
| Coil power | DC type: 900mW; AC type: 2VA |

## SAFETY APPROVAL RATINGS

| | | | |
|---|---|---|---|
| UL& CUR | 1 Form A | | 30A 277VAC<br>30A 28VDC<br>2HP 250VAC<br>1HP 125VAC<br>277VAC(FLA=20)(LRA=60) |
| | 1 Form B | | 15A 277VAC<br>10A 28VDC<br>1/2HP 250VAC<br>1/4HP 125VAC<br>277VAC(FLA=10)(LRA=33) |
| | 1 Form C | NO | 30A 277VAC<br>20A 277VAC<br>10A 28VDC<br>2HP 250VAC<br>1HP 125VAC<br>277VAC(FLA=20)(LRA=60) |
| | | NC | 20A 277VAC<br>10A 277VAC<br>10A 28VDC<br>1/2HP 250VAC<br>1/4HP 125VAC<br>277VAC(FLA=10)(LRA=33) |
| TÜV | | | 15A 250VAC COSØ =0.4 |

**Notes:** Only some typical ratings are listed above. If more details are required, please contact us.

## COIL DATA

at 23˚C

| Nominal Voltage VDC | Pick-up Voltage VDC | Drop-out Voltage VDC | Max. Allowable Voltage VDC | Coil Resistance Ω |
|---|---|---|---|---|
| 5 | 3.75 | 0.5 | 6.5 | 27 x (1±10%) |
| 6 | 4.50 | 0.6 | 7.8 | 40 x (1±10%) |
| 9 | 6.75 | 0.9 | 11.7 | 97 x (1±10%) |
| 12 | 9.00 | 1.2 | 15.6 | 155 x (1±10%) |
| 15 | 11.25 | 1.5 | 19.5 | 256 x (1±10%) |
| 18 | 13.50 | 1.8 | 23.4 | 380 x (1±10%) |
| 24 | 18.00 | 2.4 | 31.2 | 660 x (1±10%) |
| 48 | 36.00 | 4.8 | 62.4 | 2560 x (1±10%) |
| 70 | 52.50 | 7.0 | 91 | 5500 x (1±10%) |
| 110 | 82.50 | 11 | 143 | 13450 x (1±10%) |

| Nominal Voltage VAC | Pick-up Voltage VAC | Drop-out Voltage VAC | Max. Allowable Voltage VDC | Coil Resistance Ω |
|---|---|---|---|---|
| 12 | 9.6 | 2.4 | 15.6 | 25 x (1±10%) |
| 24 | 19.2 | 4.8 | 31.2 | 100 x (1±10%) |
| 120 | 96.0 | 24.0 | 156 | 2500 x (1±10%) |
| 208 | 166.4 | 41 | 270.4 | 11000 x (1±10%) |
| 220/240 | 192 | 48 | 286 | 13490 x (1±10%) |
| 277 | 220 | 54 | 360.1 | 15000 x (1±10%) |

**Notes:** When requiring pick-up voltage < 80% of nominal voltage, special order allowed.

## ORDERING INFORMATION

HF105F-4 / 018 D K -1H S T F (XXX)

**Type**[1] HF105F-4: 30A
HF105F-4L: 25A
JQX-105F-4/JQX-105F-4L (Old type)

**Coil voltage** **DC:** 5 to 110VDC **AC:** 12 to 277VAC

**Coil voltage form** **D:** DC **A:** AC

**Coil terminal width** **K:** 4.8mm **Nil:** 2.8mm

**Contact arrangement** **1H:**1 Form A **1D:**1 Form B **1Z:**1 Form C

**Construction** [2] **S:** Wash tight **Nil:** Dust protected

**Contact material** **T:** $AgSnO_2$ **Nil:** AgCdO

**Insulation standard** **F:** Class F **Nil:** Class B

**Customer special code** [3]
(Only for special requirements)
e.g. (551) stands for RoHS compliant (Cadmium containing contacts)
(555) stands for RoHS compliant (Cadmium-free contacts)

**Notes:** 1) We have now gradually updated our ordering information. We suggest new type should be selected. If necessary, old type can be kept for some period for the old customers.
2) Under the ambience with dangerous gas like $H_2S$, $SO_2$ or $NO_2$, wash tight type is recommended; please test the relay in real applications. If the ambience allows, dust protected is preferentially recommended.
3) HF105F-4 is an environmental friendly product. Please mark a special code (555) or (551) when ordering. (551) stands RoHS compliant with Cadmium contact; (555) stands for RoHS compliant with Cadmium-free contact.

## OUTLINE DIMENSIONS, WIRING DIAGRAM AND PC BOARD LAYOUT

Unit: mm

### 1 Form A

Outline Dimensions

Wiring Diagram

(Top view)

2.8mm Terminal width

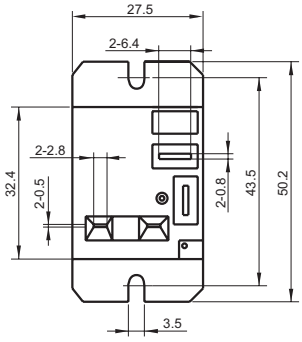


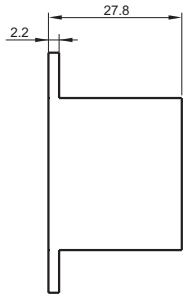


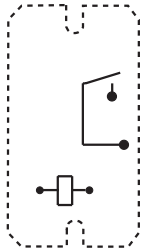

4.8mm Terminal width

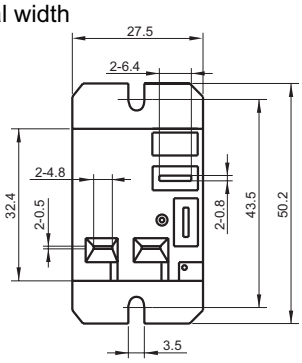


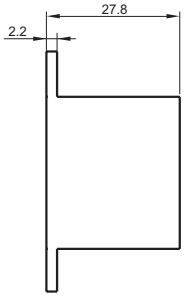


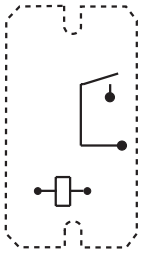

### 1 Form B

2.8mm Terminal width

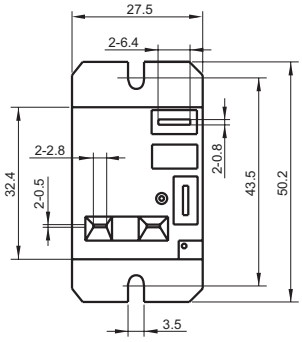


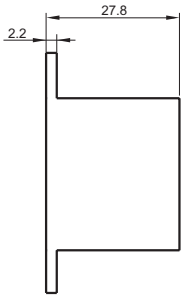


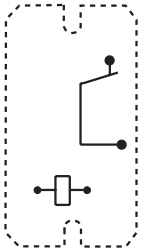

4.8mm Terminal width

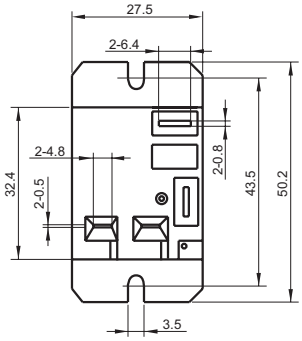


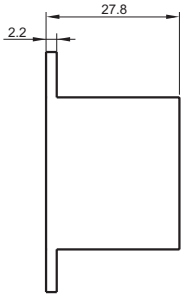


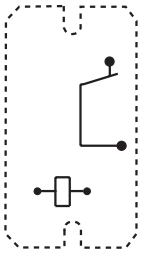

## OUTLINE DIMENSIONS, WIRING DIAGRAM AND PC BOARD LAYOUT

Unit: mm

1 Form C

Outline Dimensions

Wiring Diagram
(Top view)

2.8mm Terminal width

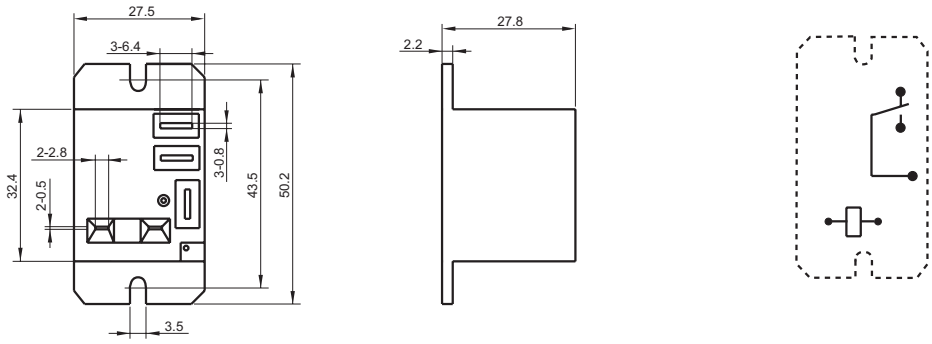


4.8mm Terminal width

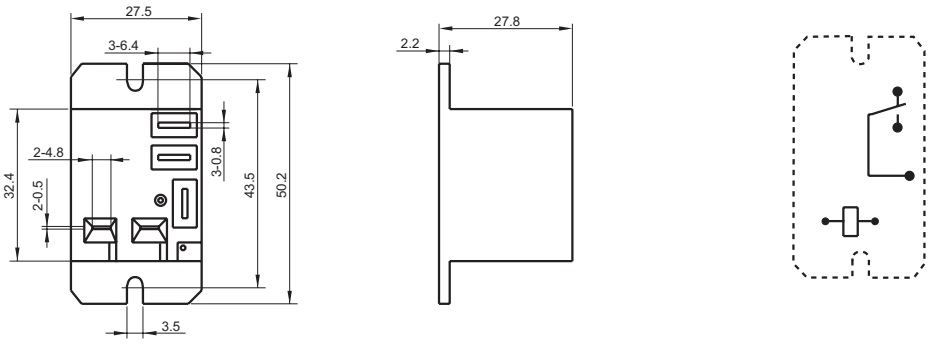


Remark: In case of no tolerance shown in outline dimension: outline dimension ≤1mm, tolerance should be ±0.2mm; outline dimension >1mm and ≤5mm, tolerance should be ±0.3mm; outline dimension >5mm, tolerance should be ±0.4mm.

## CHARACTERISTIC CURVES

COIL TEMPERATURE RISE

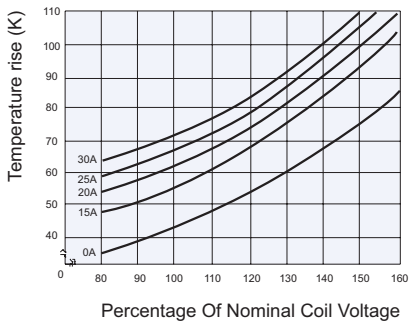


MAXIMUM SWITCHING POWER

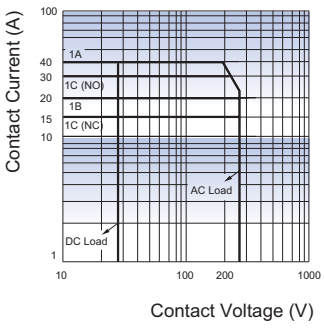


ENDURANCE CURVE

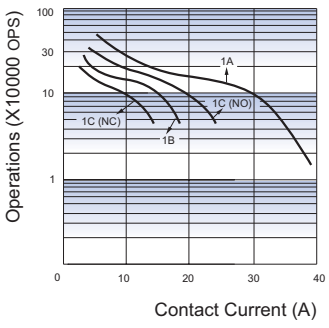


### Disclaimer

This datasheet is for the customers' reference. All the specifications are subject to change without notice.
We could not evaluate all the performance and all the parameters for every possible application. Thus the user should be in a right position to choose the suitable product for their own application. If there is any query, please contact Hongfa for the technical service. However, it is the user's responsibility to determine which product should be used only.

© Xiamen Hongfa Electroacoustic Co., Ltd. All rights of Hongfa are reserved.