500mA Low Dropout Linear Regulator

FEATURES

- Low Dropout Voltage of 650mV at 500mA Output Current (3V Output Version).
- Guaranteed 500mA Output Current.
- Maximum Input Voltage is 8V
- Low Ground Current at 65μA.
- 2% Accuracy Output Voltage of 1.8V/ 2.0V /2.5V /2.7V/ 3.0V/ 3.3V/ 3.5V/ 3.7V/ 3.8V/ 5.0V/ 5.2V.
- Only needs 4.7μF Output Capacitor for Stability.
- Current and Thermal Limiting.

APPLICATIONS

- CD-ROM Drivers.
- LAN Cards.
- Microprocessor.
- RAM Module.
- Wireless Communication Systems.
- Battery Powered Systems.

DESCRIPTION

The AIC1723A is a 3-pin low dropout linear regulator. The superior characteristics of the AIC1723A include zero base current loss, very low dropout voltage, and 2% accuracy output voltage. Typical ground current remains approximately 65 μ A, for loading ranging from zero to maximum. Dropout voltage turns substantially low when output current is 500mA. Built-in output current limiting and thermal limiting provide maximal protection to the AIC1723A against fault conditions.

The AIC1723A is available with popular SOT-23, SOT-223, SOT-89 and TO-252 packages.

TYPICAL APPLICATION CIRCUIT

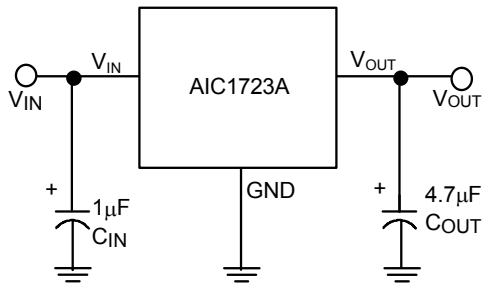

Low Dropout Linear Regulator
(C_{IN} and C_{OUT} are electrolytic capacitor)

ORDERING INFORMATION

AIC1723A-XXXX XX

- PACKING TYPE
  - TR: TAPE & REEL
  - TB: TUBE
- PACKAGE TYPE
  - E: TO-252
  - U: SOT-23
  - X: SOT-89
  - Y: SOT-223
- C: Commercial
  - P: Lead Free Commercial
- OUTPUT VOLTAGE
  - 18: 1.8V
  - 20: 2.0V
  - 25: 2.5V
  - 27: 2.7V
  - 30: 3.0V
  - 33: 3.3V
  - 35: 3.5V
  - 37: 3.7V
  - 38: 3.8V
  - 50: 5.0V
  - 52: 5.2V

PIN CONFIGURATION

SOT-23 (CU & PU)
TOP VIEW
1: GND
2: VOUT
3: VIN

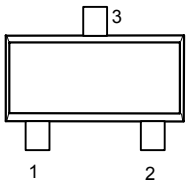

TO-252 (CE & PE)
TOP VIEW
1: VOUT
2. GND
3. VIN

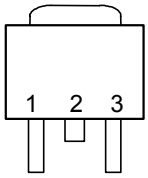

SOT-89 (CX & PX)
TOP VIEW
1: GND
2. VIN
3. VOUT

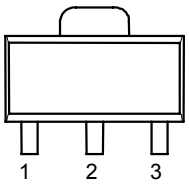

SOT-223 (CY & PY)
TOP VIEW
1: VOUT
2. GND
3. VIN

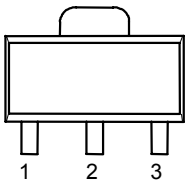

Example: AIC1723A-18CETR
→ 1.8V Version, in TO-252 Package & Tape & Reel Packing Type
AIC1723A-18PYTR
→ 1.8V Version, in SOT-223 Lead Free Package & Tape & Reel Packing Type

- **SOT-23 MARKING**

Part No.	CU	PU	Part No.	CU	PU
AIC1723A-18XU	BT18	BT18P	AIC1723A-35XU	BT35	BT35P
AIC1723A-20XU	BT20	BT20P	AIC1723A-37XU	BT37	BT37P
AIC1723A-25XU	BT25	BT25P	AIC1723A-38XU	BT38	BT38P
AIC1723A-27XU	BT27	BT27P	AIC1723A-50XU	BT50	BT50P
AIC1723A-30XU	BT30	BT30P	AIC1723A-52XU	BT52	BT52P
AIC1723A-33XU	BT33	BT33P			

- **SOT-89 MARKING**

Part No.	CX	PX	Part No.	CX	PX
AIC1723A-18XX	AV18	AV18P	AIC1723A-35XX	AV35	AV35P
AIC1723A-20XX	AV20	AV20P	AIC1723A-37XX	AV37	AV37P
AIC1723A-25XX	AV25	AV25P	AIC1723A-38XX	AV38	AV38P
AIC1723A-27XX	AV27	AV27P	AIC1723A-50XX	AV50	AV50P
AIC1723A-30XX	AV30	AV30P	AIC1723A-52XX	AV52	AV52P
AIC1723A-33CY	AV33	AV33P			

- **SOT-223 MARKING**

Part No.	CY	PY	Part No.	CY	PY
AIC1723A-18XY	BU18	BU18P	AIC1723A-35XY	BU35	BU35P
AIC1723A-20XY	BU20	BU20P	AIC1723A-37XY	BU37	BU37P
AIC1723A-25XY	BU25	BU25P	AIC1723A-38XY	BU38	BU38P
AIC1723A-27XY	BU27	BU27P	AIC1723A-50XY	BU50	BU50P
AIC1723A-30XY	BU30	BU30P	AIC1723A-52XY	BU52	BU52P
AIC1723A-33XY	BU33	BU33P			

ABSOLUTE MAXIMUM RATINGS

Input Supply Voltage ..... -0.3~8V

Operating Temperature Range ..... -40°C~ 85°C

Junction Temperature ..... 125°C

Storage Temperature Range ..... -65°C~150°C

Lead Temperature (Soldering. 10sec) ..... 260°C

Thermal Resistance Junction to Ambient (Assume no Ambient Airflow, no Heatsink)

SOT-23 Package ..... 180°C/W

TO-252 Package ..... 100°C/W

SOT-89 Package ..... 160°C/W

SOT-223 Package ..... 155°C/W

Absolute Maximum Rating are those value beyond which the life of a device may be impaired.

TEST CIRCUIT

Refer to the TYPICAL APPLICATION CIRCUIT

■ ELECTRICAL CHARACTERISTICS (T_A=25°C, C_{IN}=1μF, C_{OUT}=4.7μF, unless otherwise specified.) (Note 1)

PARAMETER	TEST CONDITIONS		MIN.	TYP.	MAX.	UNIT
Output Voltage	No Load AIC1723A-52 AIC1723A-50 AIC1723A-38 AIC1723A-37 AIC1723A-35 AIC1723A-33 AIC1723A-30 AIC1723A-27 AIC1723A-25 AIC1723A-20 AIC1723A-18	V_{IN}=8V	-2		+2	%
Line Regulation	I_L=1mA, 1.8V≤V_{OUT}≤3.2V 3.3V≤V_{OUT}≤5.2V	 V_{IN}=4V~8V V_{IN}=5.5V~8V		 3 3	 10 15	mV
Load Regulation (Note 2)	I_L=0.1~500mA 1.8V≤V_{OUT}≤3.9V 4.0V≤V_{OUT}≤5.2V	 V_{IN}=5V V_{IN}=7V		 10 20	 30 50	mV
Current Limit (Note 3)	V_{IN}=7V, V_{OUT}=0V		500			mA
Dropout Voltage (Note 4)	I_L=500mA	4.0V≤V_{OUT}≤5.2V 3.0V≤V_{OUT}≤3.9V 2.5V≤V_{OUT}≤2.9V 2.0V≤V_{OUT}≤2.4V 1.8V≤V_{OUT}≤1.9V		510 650 780 1100 1400		mV
Ground Current	I_O=0.1mA~I_{MAX} 1.8V≤V_{OUT}≤3.9V 4.0V≤V_{OUT}≤5.2V	 V_{IN}=5~8V V_{IN}=7~8V		 65 65	 90 90	μA

Note 1: Specifications are production tested at T_A =25°C. Specifications over the -40°C to 85°C operating temperature range are assured by design, characterization and correlation with Statistical Quality Controls (SQC).
Note 2: Regulation is measured at constant junction temperature, using pulse testing with a low ON time.
Note 3: Current limit is measured by pulsing a short time.
Note 4: Dropout voltage is defined as the input to output differential at which the output voltage drops 100mV below the value measured with a 1V differential.

TYPICAL PERFORMANCE CHARACTERISTICS

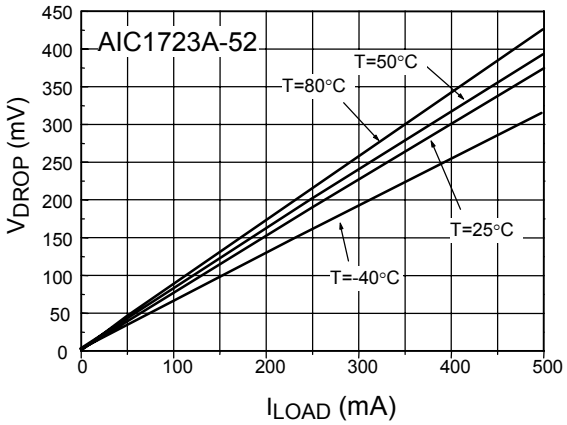

V_{DROP} vs. I_{LOAD}

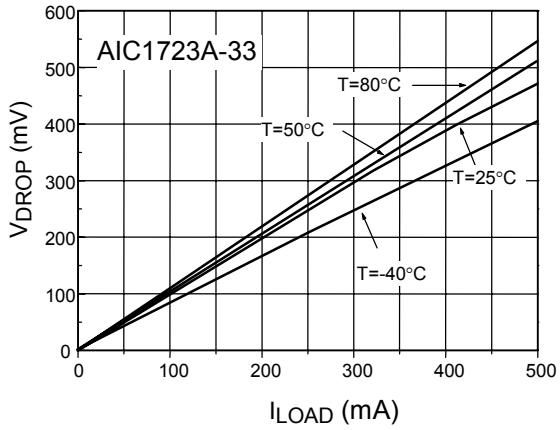

V_{DROP} vs. I_{LOAD}

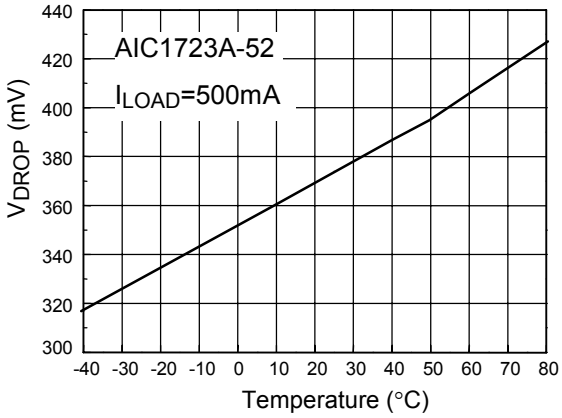

V_{DROP} vs. Temperature

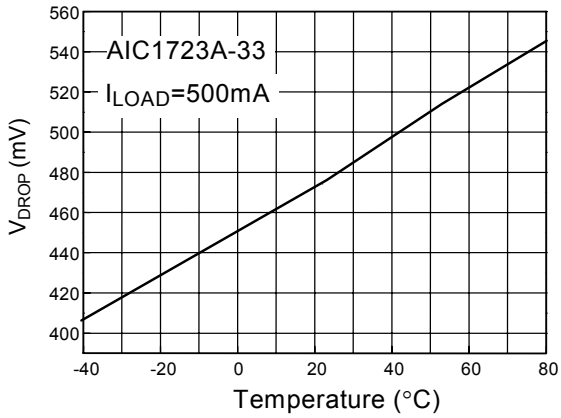

V_{DROP} vs. Temperature

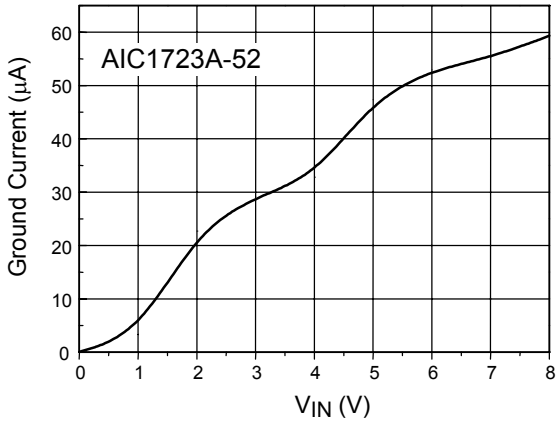

Ground Current vs. V_{IN}

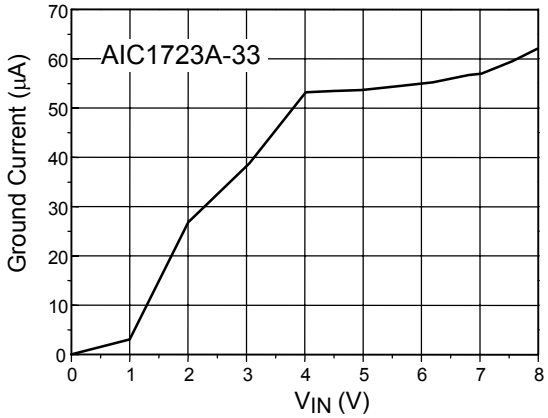

Ground Current vs. V_{IN}

TYPICAL PERFORMANCE CHARACTERISTICS (Continued)

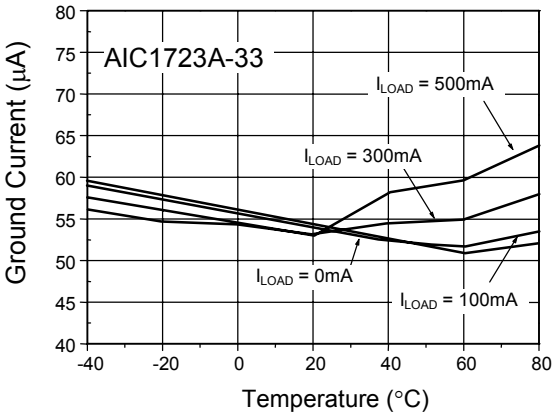

Ground Current vs. Temperature

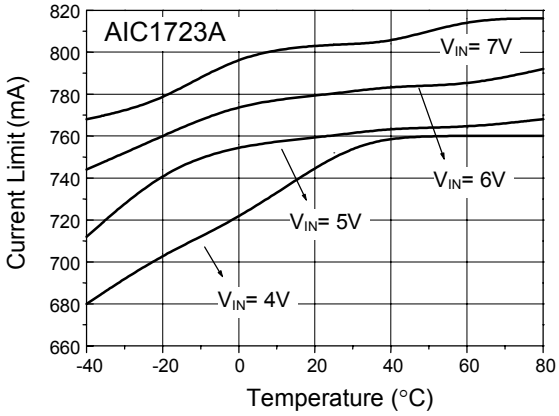

Current Limit vs. Temperature

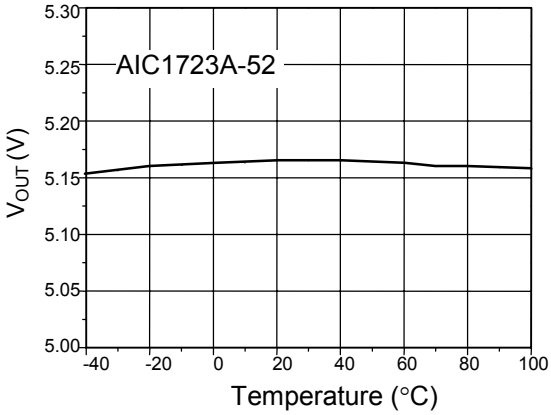

V_{OUT} vs. Temperature

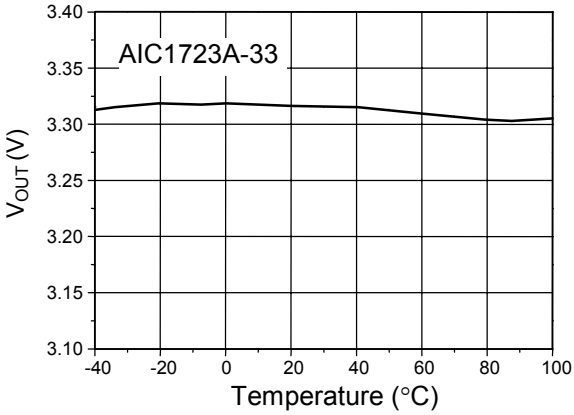

V_{OUT} vs. Temperature

BLOCK DIAGRAM

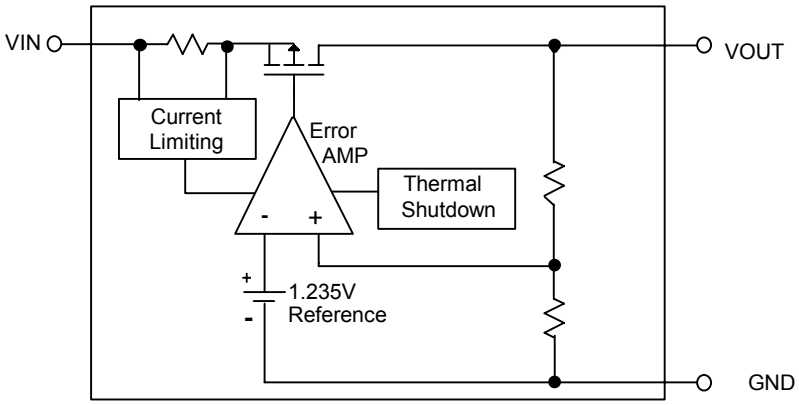

PIN DESCRIPTIONS

VOUT PIN - Output pin.
GND PIN - Power GND.
VIN PIN - Power Supply Input.

PHYSICAL DIMENSIONS (unit: mm)

- **SOT-23 (CU) (PU)**

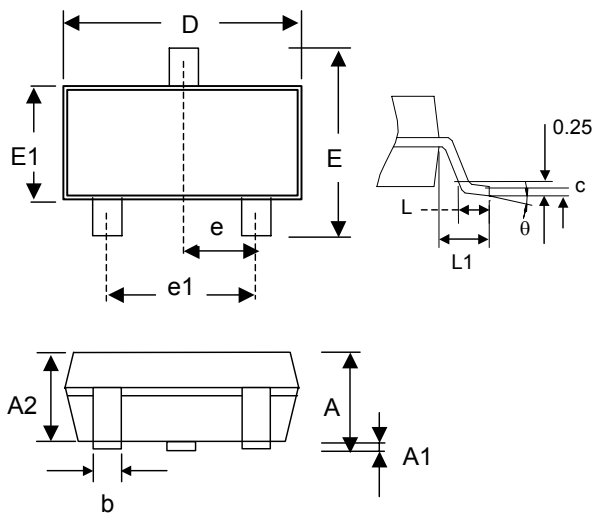

SYMBOL	MIN	MAX
A	0.95	1.45
A1	0.05	0.15
A2	0.90	1.30
b	0.30	0.50
c	0.08	0.22
D	2.80	3.00
E	2.60	3.00
E1	1.50	1.70
e	0.95 BSC	
e1	1.90 BSC	
L	0.30	0.60
L1	0.60 REF	
θ	0°	8°

- **TO-252 (CE) (PE)**

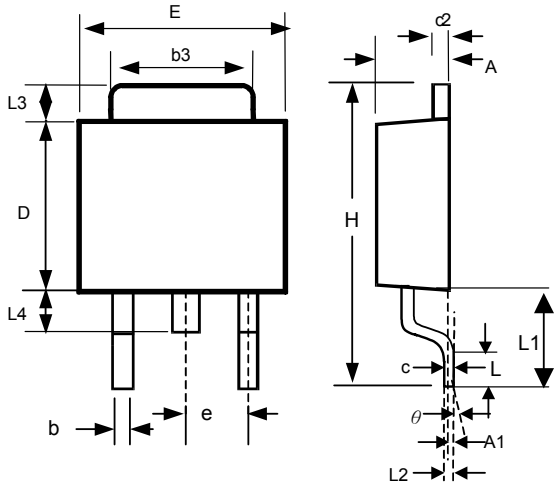

SYMBOL	MIN	MAX
A	2.19	2.38
A1	0.00	0.13
b	0.64	0.89
b3	5.21	5.46
c	0.46	0.61
c2	0.46	0.58
D	5.33	6.22
E	6.35	6.73
e	2.28 BSC	
H	9.40	10.41
L	1.40	1.78
L1	2.67 REF	
L2	0.51 BSC	
L3	0.89	2.03
L4	0.64	1.02
θ	0°	8°

- **SOT-89 (CX) (PX)**

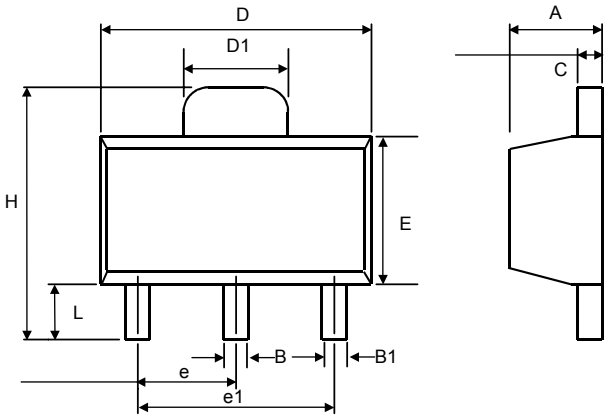

SYMBOL	MIN	MAX
A	1.40	1.60
B	0.44	0.56
B1	0.36	0.48
C	0.35	0.44
D	4.40	4.60
D1	1.50	1.83
E	2.29	2.60
e	1.50 BSC	
e1	3.00 BSC	
H	3.94	4.25
L	0.89	1.20

- **SOT-223 (CY) (PY)**

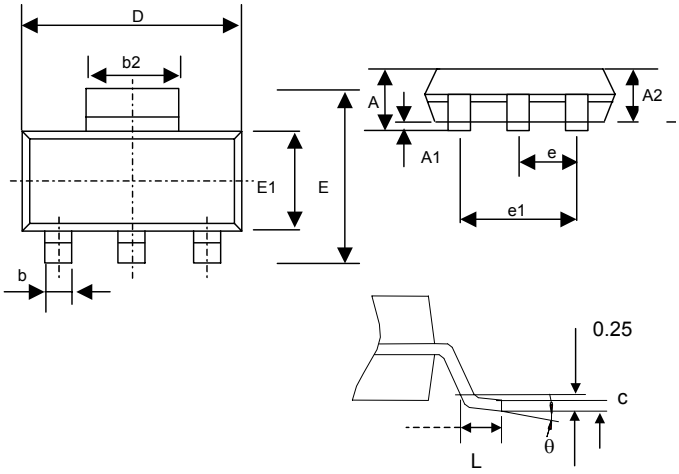

SYMBOL	MIN	MAX
A	-	1.80
A1	0.02	0.10
A2	1.55	1.65
b	0.66	0.84
b2	2.90	3.10
c	0.23	0.33
D	6.30	6.70
E	6.70	7.30
E1	3.30	3.70
e	2.30 BSC	
e1	4.60 BSC	
L	0.90	-
θ	0°	8°

Note:

Information provided by AIC is believed to be accurate and reliable. However, we cannot assume responsibility for use of any circuitry other than circuitry entirely embodied in an AIC product; nor for any infringement of patents or other rights of third parties that may result from its use. We reserve the right to change the circuitry and specifications without notice.

Life Support Policy: AIC does not authorize any AIC product for use in life support devices and/or systems. Life support devices or systems are devices or systems which, (I) are intended for surgical implant into the body or (ii) support or sustain life, and whose failure to perform, when properly used in accordance with instructions for use provided in the labeling, can be reasonably expected to result in a significant injury to the user.