Full - Bridge MOSFET Power Module

V_{DSS} = 100V
R_{DSon} = 4.5mΩ typ @ Tj = 25°C
I_D = 278A @ Tc = 25°C

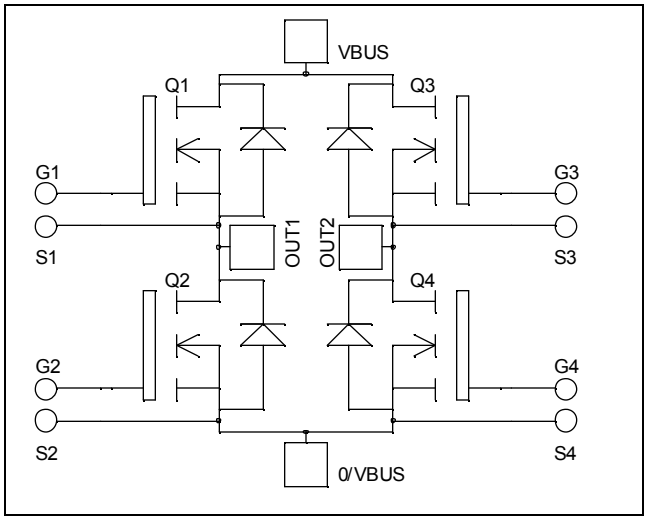

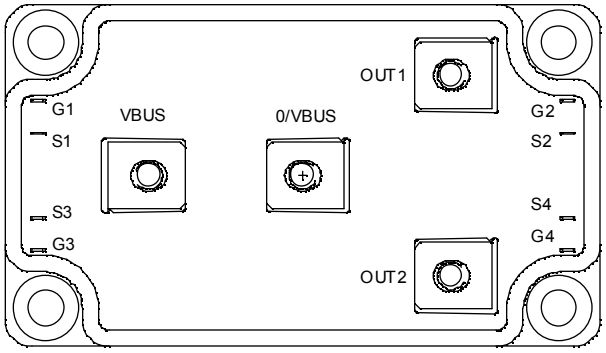

Application

- Welding converters
- Switched Mode Power Supplies
- Uninterruptible Power Supplies
- Motor control

Features

- Power MOS V® FREDFETs
  - Low R_{DSon}
  - Low input and Miller capacitance
  - Low gate charge
  - Fast intrinsic reverse diode
  - Avalanche energy rated
  - Very rugged
- Kelvin source for easy drive
- Very low stray inductance
  - Symmetrical design
  - M5 power connectors
- High level of integration

Benefits

- Outstanding performance at high frequency operation
- Direct mounting to heatsink (isolated package)
- Low junction to case thermal resistance
- Low profile

Absolute maximum ratings

Symbol	*Parameter*		*Max ratings*	*Unit*
V_{DSS}	Drain - Source Breakdown Voltage		100	V
I_D	Continuous Drain Current	T_c = 25°C	278	A
		T_c = 80°C	207	
I_{DM}	Pulsed Drain current		1100	
V_{GS}	Gate - Source Voltage		±30	V
R_{DSon}	Drain - Source ON Resistance		5	mΩ
P_D	Maximum Power Dissipation	T_c = 25°C	780	W
I_{AR}	Avalanche current (repetitive and non repetitive)		100	A
E_{AR}	Repetitive Avalanche Energy		50	mJ
E_{AS}	Single Pulse Avalanche Energy		3000	

CAUTION: These Devices are sensitive to Electrostatic Discharge. Proper Handing Procedures Should Be Followed.

All ratings @ T_j = 25°C unless otherwise specified

Electrical Characteristics

Symbol	Characteristic	Test Conditions		Min	Typ	Max	Unit
I_{DSS}	Zero Gate Voltage Drain Current	V_{GS} = 0V, V_{DS} = 100V	T_j = 25°C			200	µA
		V_{GS} = 0V, V_{DS} = 80V	T_j = 125°C			1000	
$R_{DS(on)}$	Drain – Source on Resistance	V_{GS} = 10V, I_D = 125A			4.5	5	mΩ
$V_{GS(th)}$	Gate Threshold Voltage	V_{GS} = V_{DS}, I_D = 5mA		2		4	V
I_{GSS}	Gate – Source Leakage Current	V_{GS} = ±30 V, V_{DS} = 0V				±200	nA

Dynamic Characteristics

Symbol	Characteristic	Test Conditions	Min	Typ	Max	Unit
C_{iss}	Input Capacitance	V_{GS} = 0V V_{DS} = 25V f = 1MHz		20		nF
C_{oss}	Output Capacitance			8		
C_{rss}	Reverse Transfer Capacitance			2.9		
Q_g	Total gate Charge	V_{GS} = 10V V_{Bus} = 50V I_D = 250A		700		nC
Q_{gs}	Gate – Source Charge			120		
Q_{gd}	Gate – Drain Charge			360		
$T_{d(on)}$	Turn-on Delay Time	**Resistive Switching** V_{GS} = 15V V_{Bus} = 66V I_D = 250A R_G = 2.5 Ω		80		ns
T_r	Rise Time			165		
$T_{d(off)}$	Turn-off Delay Time			280		
T_f	Fall Time			135		
E_{on}	Turn-on Switching Energy ❶	**Inductive switching @ 25°C** V_{GS} = 15V, V_{Bus} = 66V I_D = 250A, R_G =2.5Ω		1.1		mJ
E_{off}	Turn-off Switching Energy ❷			1.2		
E_{on}	Turn-on Switching Energy ❶	**Inductive switching @ 125°C** V_{GS} = 15V, V_{Bus} = 66V I_D = 250A, R_G = 2.5Ω		1.22		mJ
E_{off}	Turn-off Switching Energy ❷			1.28		

Source - Drain diode ratings and characteristics

Symbol	Characteristic	Test Conditions		Min	Typ	Max	Unit
I_S	Continuous Source current (Body diode)		Tc = 25°C			278	A
			Tc = 80°C			207	
V_{SD}	Diode Forward Voltage	V_{GS} = 0V, I_S = - 250A				1.3	V
dv/dt	Peak Diode Recovery ❸					5	V/ns
t_{rr}	Reverse Recovery Time	I_S = - 250A V_R = 66V di_S/dt = 200A/µs	T_j = 25°C			190	ns
			T_j = 125°C			370	
Q_{rr}	Reverse Recovery Charge	I_S = - 250A V_R = 66V di_S/dt = 200A/µs	T_j = 25°C		0.8		µC
			T_j = 125°C		3.4		

❶ E_{on} includes diode reverse recovery.
❷ In accordance with JEDEC standard JESD24-1.
❸ dv/dt numbers reflect the limitations of the circuit rather than the device itself.
$I_S \leq$ - 278A di/dt ≤ 200A/µs $V_R \leq V_{DSS}$ $T_j \leq$ 150°C

Thermal and package characteristics

Symbol	Characteristic			Min	Typ	Max	Unit
R_{thJC}	Junction to Case					0.16	°C/W
V_{ISOL}	RMS Isolation Voltage, any terminal to case t =1 min, I isol<1mA, 50/60Hz			2500			V
T_J	Operating junction temperature range			-40		150	°C
T_{STG}	Storage Temperature Range			-40		125	
T_C	Operating Case Temperature			-40		100	
Torque	Mounting torque	To heatsink	M6	3		5	N.m
		For terminals	M5	2		3.5	
Wt	Package Weight					280	g

Package outline (dimensions in mm)

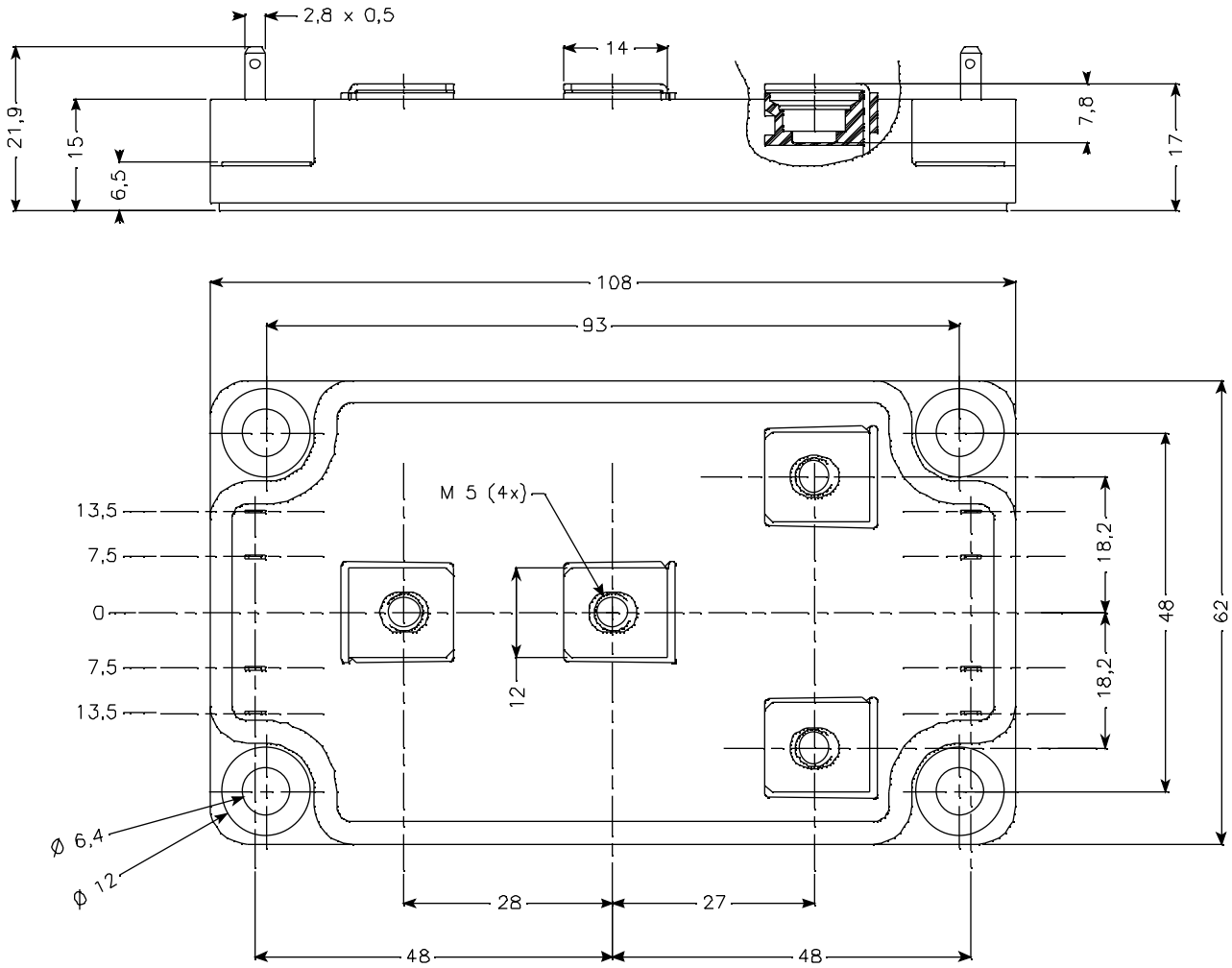

Typical Performance Curve

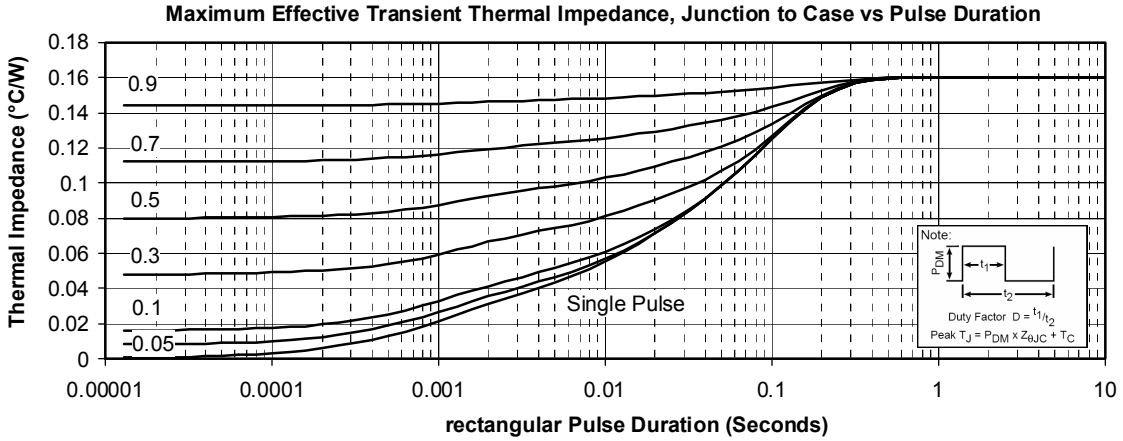

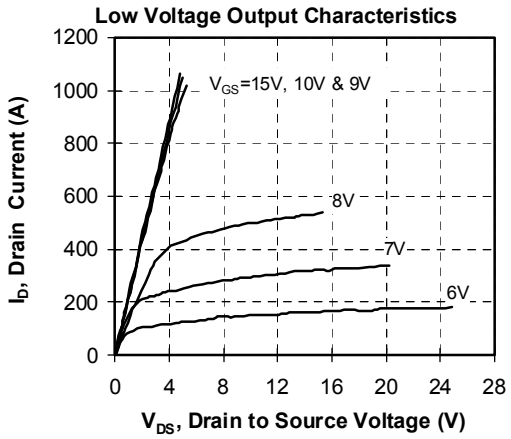

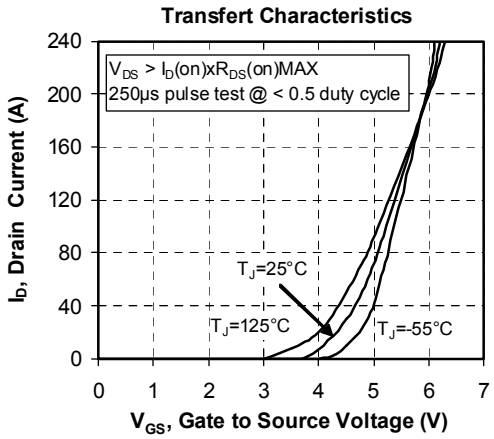

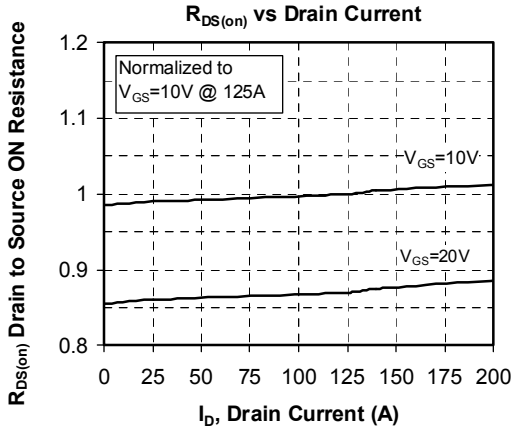

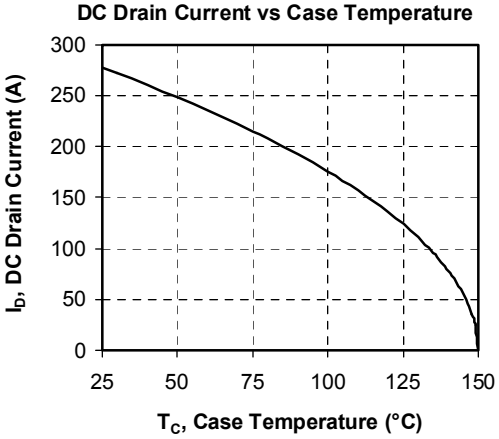

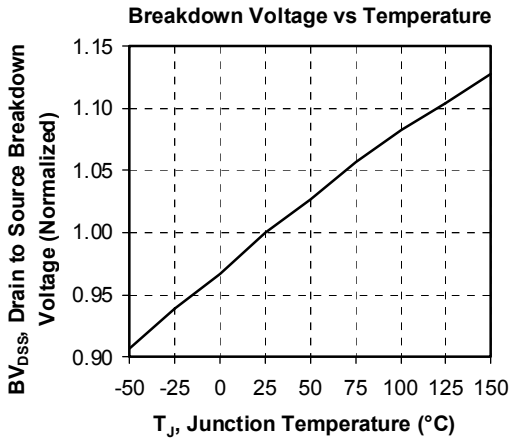
Breakdown Voltage vs Temperature
BVDSS, Drain to Source Breakdown Voltage (Normalized)
1.15
1.10
1.05
1.00
0.95
0.90
-50 -25 0 25 50 75 100 125 150
TJ, Junction Temperature (°C)

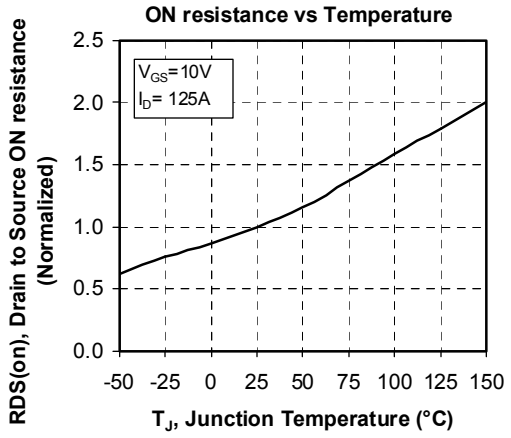
ON resistance vs Temperature
RDS(on), Drain to Source ON resistance (Normalized)
VGS=10V
ID= 125A
2.5
2.0
1.5
1.0
0.5
0.0
-50 -25 0 25 50 75 100 125 150
TJ, Junction Temperature (°C)

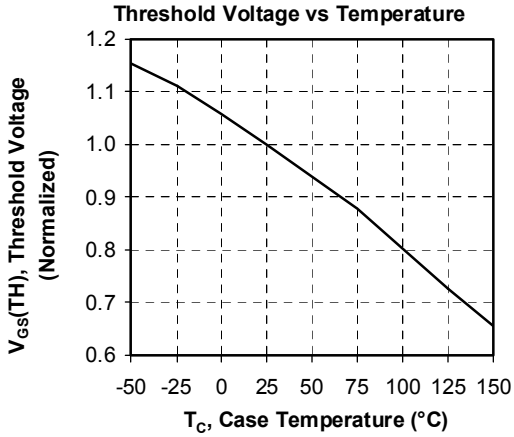
Threshold Voltage vs Temperature
VGS(TH), Threshold Voltage (Normalized)
1.2
1.1
1.0
0.9
0.8
0.7
0.6
-50 -25 0 25 50 75 100 125 150
TC, Case Temperature (°C)

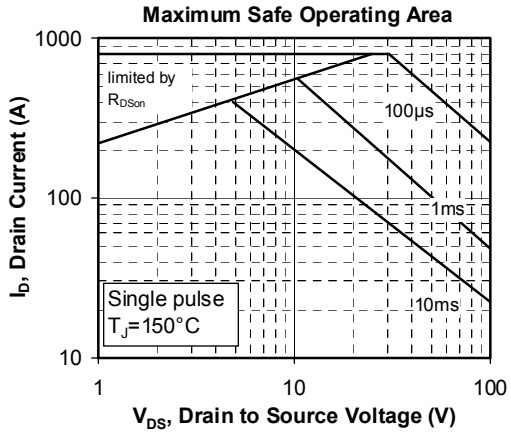
Maximum Safe Operating Area
ID, Drain Current (A)
1000
100
10
limited by
RDSon
100µs
1ms
10ms
Single pulse
TJ=150°C
1
10
100
VDS, Drain to Source Voltage (V)

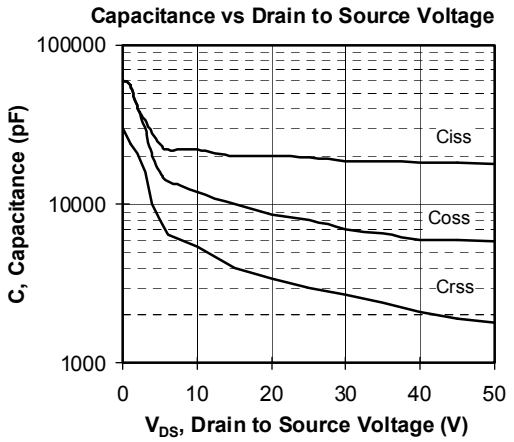
Capacitance vs Drain to Source Voltage
C, Capacitance (pF)
100000
10000
1000
Ciss
Coss
Crss
0 10 20 30 40 50
VDS, Drain to Source Voltage (V)

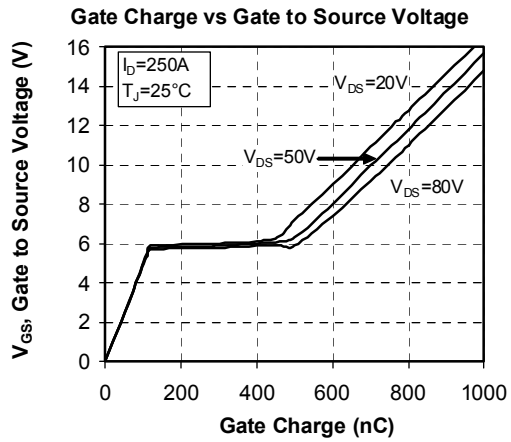
Gate Charge vs Gate to Source Voltage
VGS, Gate to Source Voltage (V)
ID=250A
TJ=25°C
VDS=20V
VDS=50V
VDS=80V
16
14
12
10
8
6
4
2
0
0 200 400 600 800 1000
Gate Charge (nC)

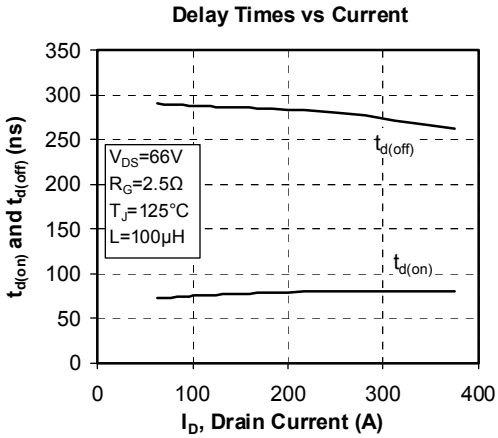

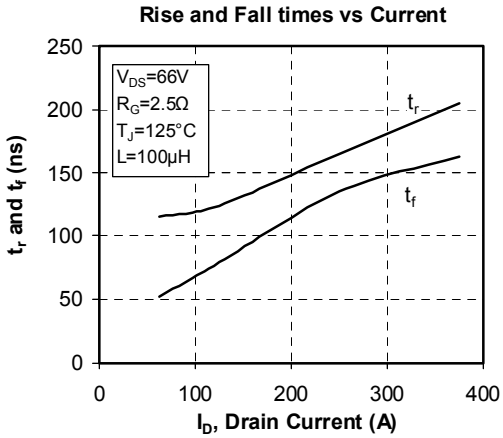

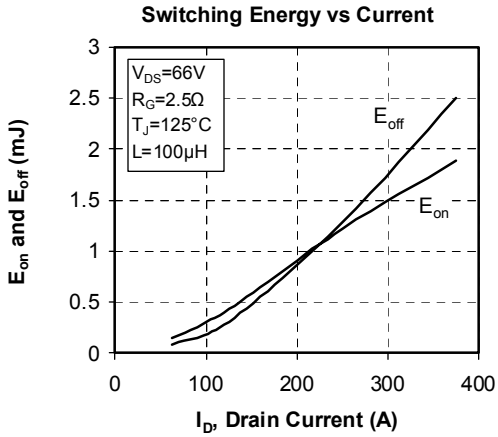

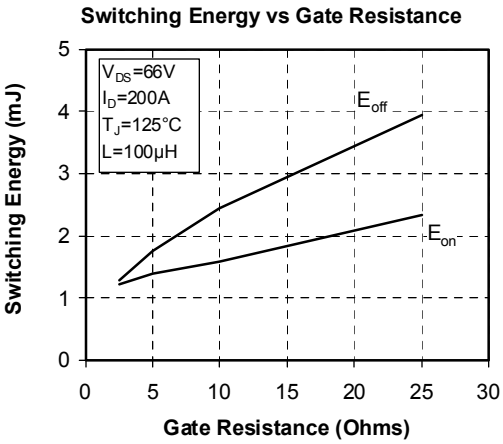

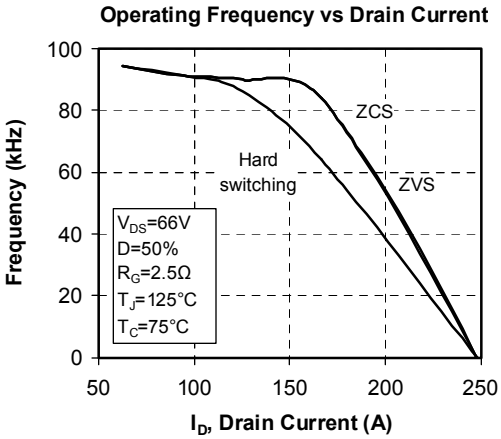

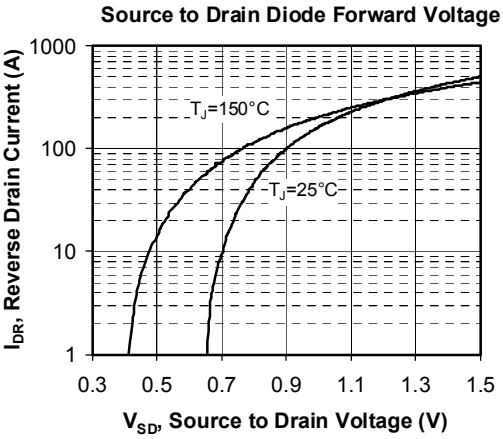

APT reserves the right to change, without notice, the specifications and information contained herein

APT's products are covered by one or more of U.S patents 4,895,810 5,045,903 5,089,434 5,182,234 5,019,522 5,262,336 6,503,786 5,256,583 4,748,103 5,283,202 5,231,474 5,434,095 5,528,058 and foreign patents. U.S and Foreign patents pending. All Rights Reserved.