HR311.063A

311.063MHz One-Port SAW Resonator For Wireless Remote Control

Approved by:
Checked by:
Issued by:

SPECIFICATION

PRODUCT: SAW RESONATOR

MODEL: HR311.063 QCC8C

HOPE MICROELECTRONICS CO.,LIMITED

Tel:+86-755-82973806 Fax:+86-755-82973550 E-mail: sales@hoperf.com http://www.hoperf.com

The HR311.063A is a true one-port, surface-acoustic-wave (**SAW**) resonator in a surface-mount ceramic **QCC8C** case. It provides reliable, fundamental-mode, quartz frequency stabilization i.e. in transmitters or local oscillators operating at **311.063** MHz.

1.Package Dimension (QCC8C)

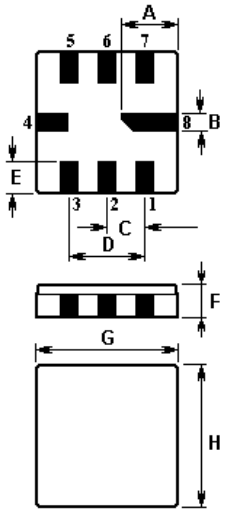

Pin	Configuration
2	Terminal1
6	Terminal2
4,8	Case Ground
1,3,5,7	Empty

Sign	Data (unit: mm)	Sign	Data (unit: mm)
A	2.08	E	1.2
B	0.6	F	1.35
C	1.27	G	5.0
D	2.54	H	5.0

2.Marking

HR311.063A

Laser Marking

3.Equivalent LC Model and Test Circuit

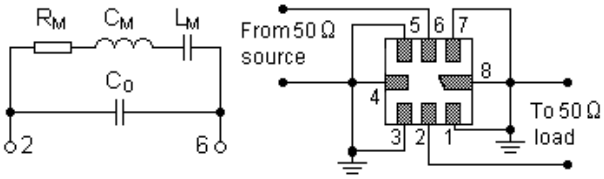

Equivalent LC Model Test Circuit

4.Typical Application Circuits

1) Low-Power Transmitter Application

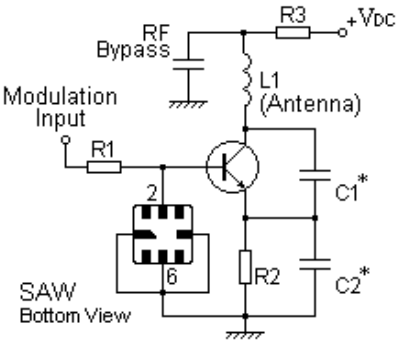

2) Local Oscillator Application

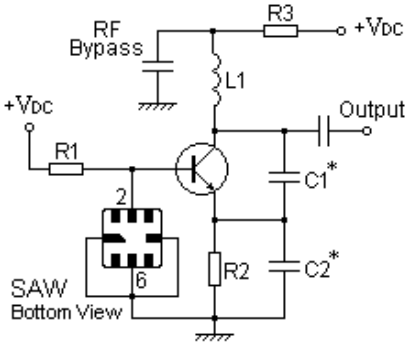

5.Typical Frequency Response

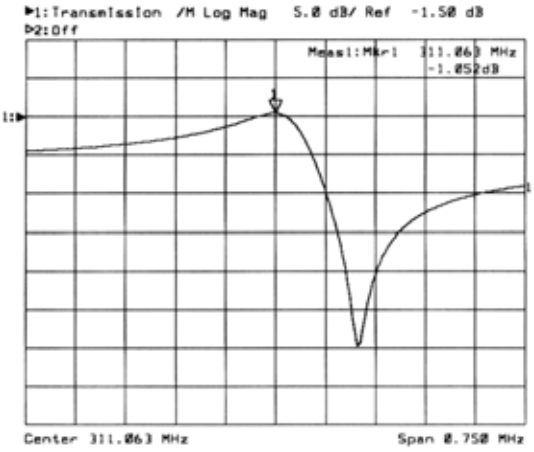

6.Temperature Characteristics

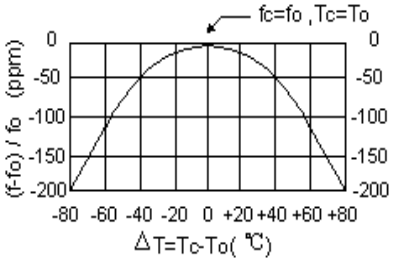

The curve shown above accounts for resonator contribution only and does not include oscillator temperature characteristics.

7.Performance

7-1.Maximum Ratings

Rating		Value	Unit
CW RF Power Dissipation	P	0	dBm
DC Voltage Between Terminals	V_{DC}	±30	V
Storage Temperature Range	T_{stg}	-40 to +85	℃
Operating Temperature Range	T_A	-10 to +60	℃

7-2.Electronic Characteristics

Characteristic		Sym	Minimum	Typical	Maximum	Unit
Center Frequency (+25°C)	Absolute Frequency	f_C	310.988		311.138	MHz
	Tolerance from 311.063 MHz	Δf_C		±75		kHz
Insertion Loss		IL		1.3	1.8	dB
Quality Factor	Unloaded Q	Q_U		13,400		
	50 Ω Loaded Q	Q_L		1,850		
Temperature Stability	Turnover Temperature	T_0	25		55	℃
	Turnover Frequency	f_0		f_C		kHz
	Frequency Temperature Coefficient	FTC		0.032		ppm/°C^2
Frequency Aging	Absolute Value during the First Year	|fA|		≤10		ppm/yr
DC Insulation Resistance Between Any Two Terminals			1.0			MΩ
RF Equivalent RLC Model	Motional Resistance	R_M		16	23	Ω
	Motional Inductance	L_M		109.8555		μH
	Motional Capacitance	C_M		2.3854		fF
	Shunt Static Capacitance	C_0	2.50	2.75	3.00	pF

ⓘCAUTION: Electrostatic Sensitive Device. Observe precautions for handling!

© 2003. All Rights Reserved.

1. The center frequency, f_C, is measured at the minimum IL point with the resonator in the 50Ω test system.
2. Unless noted otherwise, case temperature T_C = +25°C±2°C.
3. Frequency aging is the change in f_C with time and is specified at +65°C or less. Aging may exceed the specification for prolonged temperatures above +65°C. Typically, aging is greatest the first year after manufacture, decreasing in subsequent years.
4. Turnover temperature, T_0, is the temperature of maximum (or turnover) frequency, f_0. The nominal frequency at any case temperature, T_C, may be calculated from: $f = f_0 [1 - FTC (T_0 - T_C)^2]$.
5. This equivalent RLC model approximates resonator performance near the resonant frequency and is provided for reference only. The capacitance C_0 is the measured static (nonmotional) capacitance between the two terminals. The measurement includes case parasitic capacitance.
6. Derived mathematically from one or more of the following directly measured parameters: f_C, IL, 3 dB bandwidth, f_C versus T_C, and C_0.
7. The specifications of this device are based on the test circuit shown above and subject to change or obsolescence without notice.
8. Typically, equipment utilizing this device requires emissions testing and government approval, which is the responsibility of the equipment manufacturer.
9. Our liability is only assumed for the Surface Acoustic Wave (SAW) component(s) per se, not for applications, processes and circuits implemented within components or assemblies.
10. For questions on technology, prices and delivery, please contact our sales offices or e-mail sales@hoperf.com