ASM7306C

DATA SHEET

APLUS INTEGRATED CIRCUITS INC.

Address:
3 F-10, No. 32, Sec. 1, Chenggung Rd., Taipei,
Taiwan 115, R.O.C.
(115)台北市南港區成功路一段 32 號 3 樓之 10.

TEL: 886-2-2782-9266

FAX: 886-2-2782-9255

WEBSITE : http: //www.aplusinc.com.tw

Sales E-mail:
sales@aplusinc.com.tw

Technology E-mail:
service@aplusinc.com.tw

ASM7306C – VERY LOW-COST VOICE SYNTHESIZER WITH 4-BIT MICROPROCESSOR

1.0 General Description

The ASM7306C is very low cost voice synthesizer with 4-bit microprocessor. It has various features including 4-bit ALU, ROM, RAM, I/O ports, timers, clock generator, watchdog timer(WDT), voice synthesizer, etc. It consists of 22 instructions in the device. With CMOS technology and halt function can minimize power dissipation. Its architecture is similar to RISC, with two stages of instruction pipeline. It allows all instructions to be executed in a single cycle, except for program branches and data table read instructions (which need two instruction cycles).

1.1 Feature

- Single power supply can operate from 2.4V through 5.5V
- Internal Program ROM: 4K x 10-bit
- 1 sets of 18-bit DPR can access up to 224K x 10 bits data memory space
- Data Registers:
  - 64 x 4-bit data RAM (00-1Fh plus 40h-5Fh)
  - Unbanked special function registers (SFR) range: 20h-3Fh
- I/O Ports:
  - PRA: 4-bit I/O Port A (2Bh)
  - PRB: 2-bit Output Port B (2Dh)
- On-chip clock generator: Resistive Clock Drive***(RM)***
- Timer: 1
  - Timer0: a 9-bit auto-reload timer/counter
- Stack: 2-level subroutine nesting
- HALT and Release from HALT function to reduce power consumption
- Watch Dog Timer (***WDT***)
- Instruction: 1-cycle instruction except for table read and program branches which are 2-cycles
- Number of instruction: 22
- The Voice function can be implemented by microprocessor instruction
  - One 8-bit COUT output for ASM7306C

FIGURE 1.1 : Block Diagram of ASM7306C

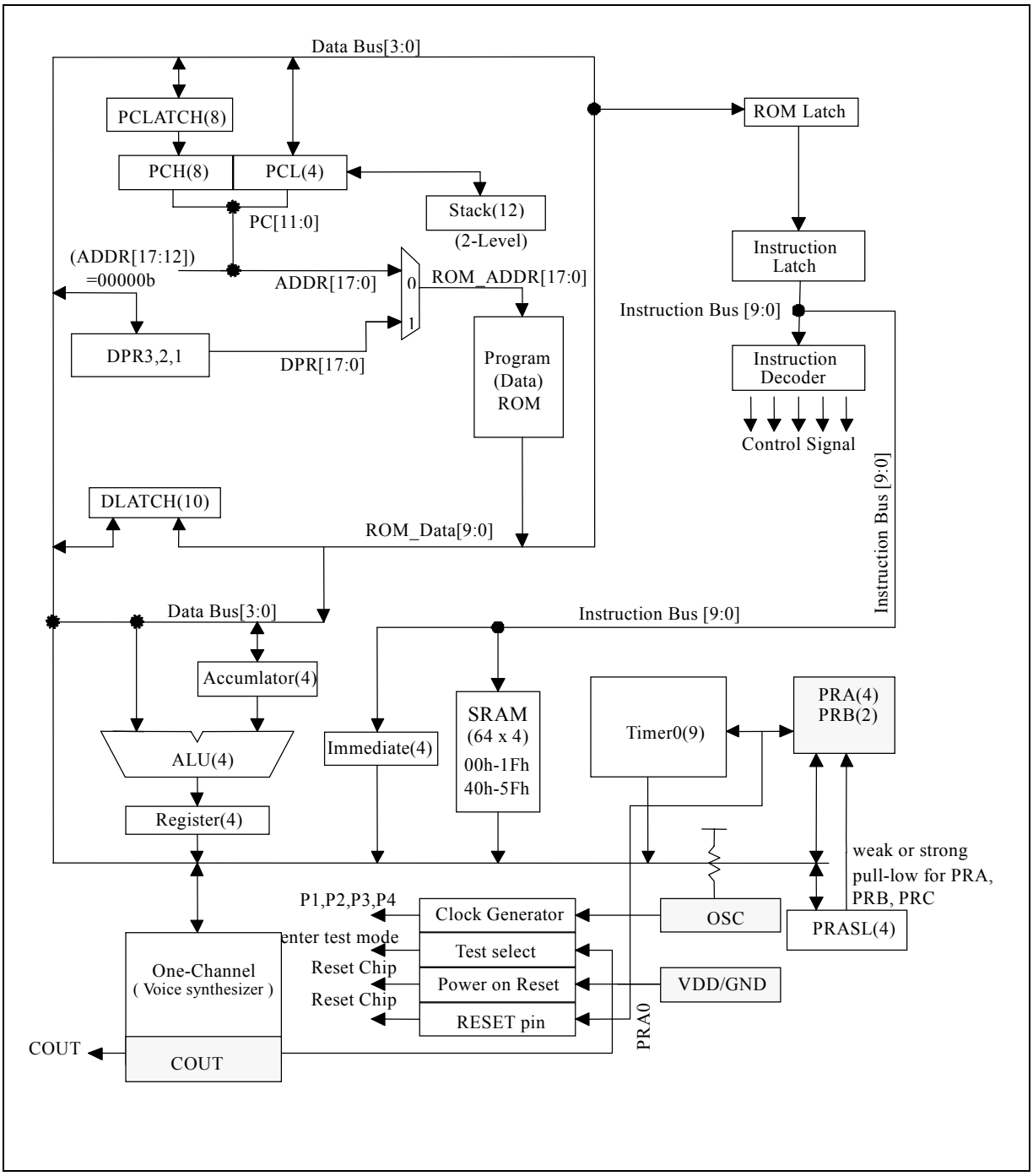

FIGURE 1.2 : External ROM Map of ASM7306C

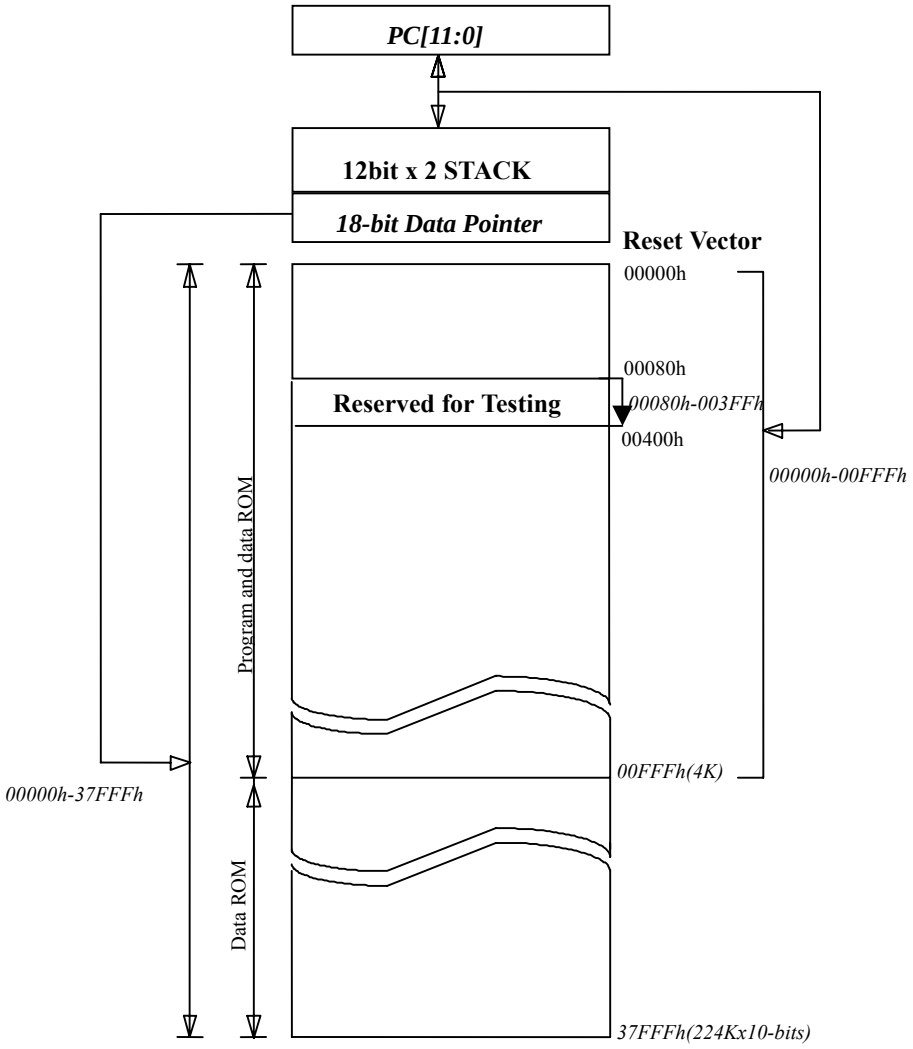

1.2 Pin-Out

ASM7306C Pin-Out			
VDD	I	-	Power supply during operation
PRA3-1	I/O	STI Std./O.D.	I/O port with programmable strong pull-low or weak pull-low or fix-input-floating capability Output type with standard or Open-Drain output
PRA0/RESET	I/O	STI Std./O.D.	I/O port with programmable strong pull-low or weak pull-low or fix-input-floating capability Output type with standard or Open-Drain output *Mask option selected as an external RESET pin with weak pull-low capability*
OSC	I	-	RM mode Oscillator input
COUT	O	-	Current Output of Audio
GND	I	-	Circuit Ground Potential
TEST	O	-	Enter Test Mode. (TEST = High)
PRB0-1	O	Std./O.D.	Output type with standard or Open-Drain output

1.3 Application circuit

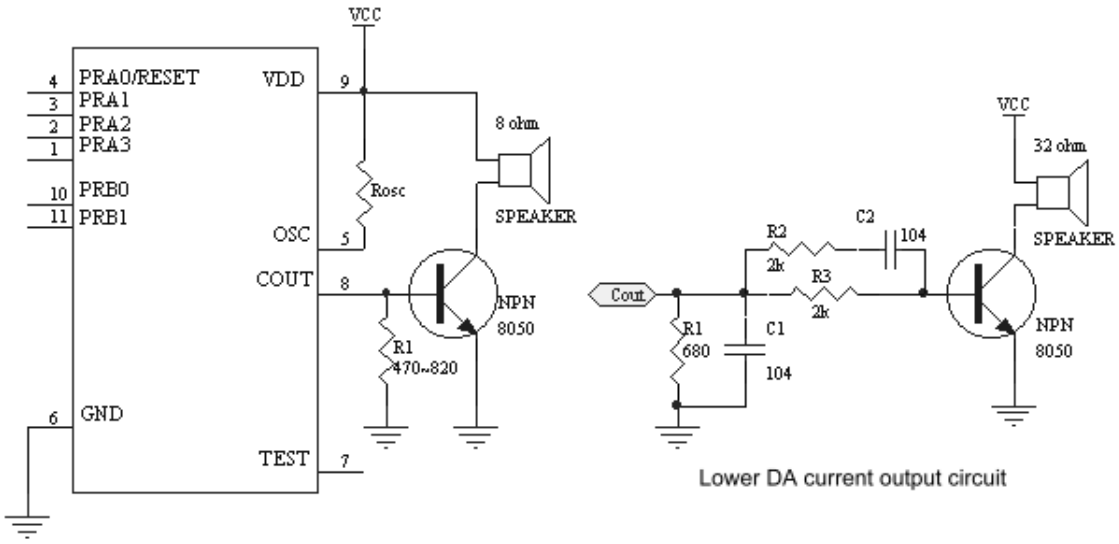

1.4 Bonding Diagram

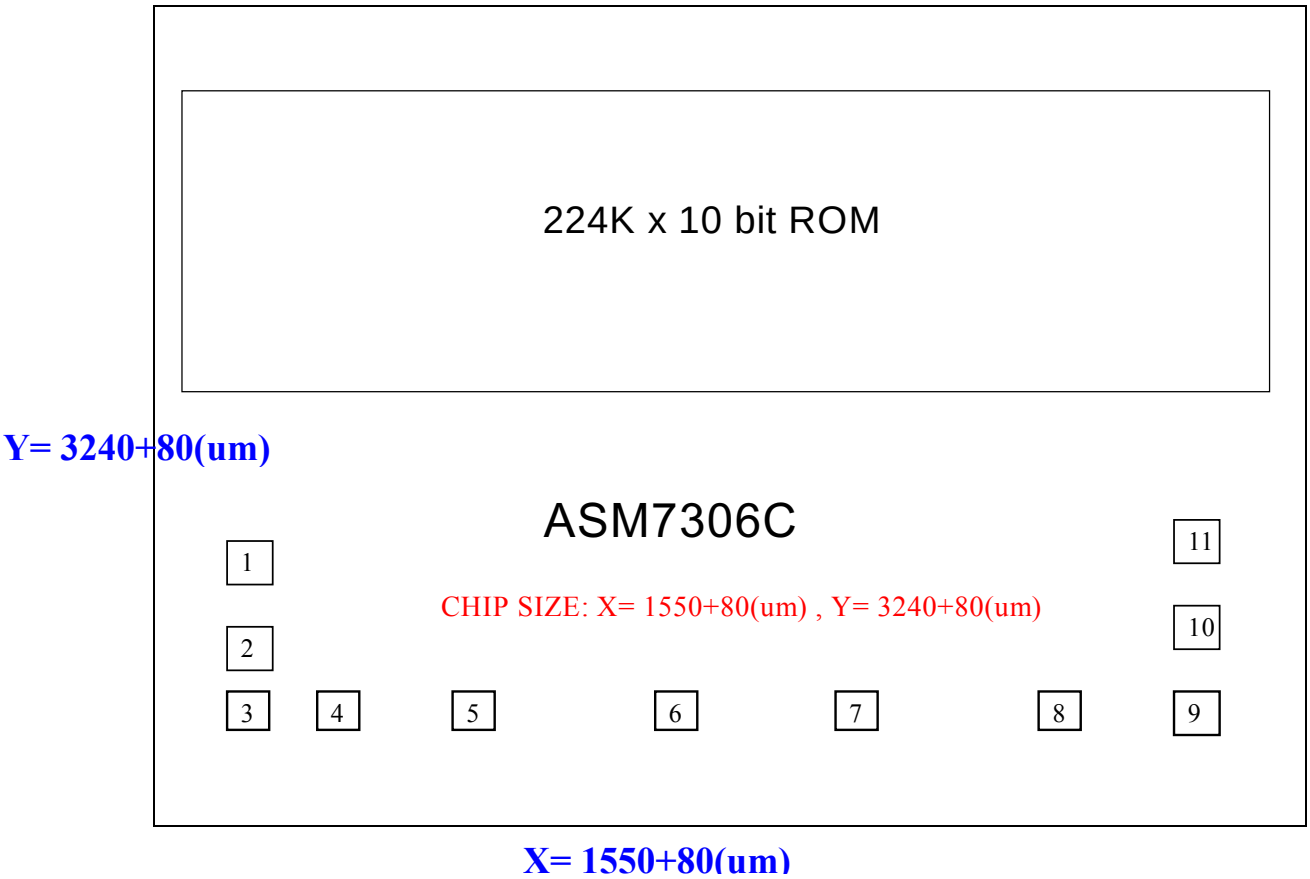

Substrate must be connected to GND.

ASM7306CPad Location				CHIP SIZE: X= 1550+80(um) , Y= 3240+80(um)			
PAD #	PAD Name	X	Y	PAD #	PAD Name	X	Y
1	RA3	-664.92	-1211.84	7	TEST	105.44	-1536.52
2	RA2	-664.92	-1339.96	8	COUT	303.96	-1536.52
3	RA1	-662.64	-1536.52	9	VDD	683.04	-1536.52
4	RA0	-468.24	-1536.52	10	RB0	664.92	-1335.52
5	OSC	-281.04	-1536.52	11	RB1	664.92	-1217.12
6	GND	-111.72	-1536.52				

1.5 DC Characteristics for ASM7306C

SYMBOL	PARAMETER		VDD	MIN.	TYP.	MAX.	UNIT	CONDITION
VDD	OPERATING VOLTAGE			2.4	3	5.5	V	depending on Freq.
Isb	SUPPLY CURRENT	STANDBY	3			1	uA	4MHz, RM in HALT Mode
			5			1		
Iop		OPERATING	3		2		mA	4MHz, RM IO Floating
			5		7			
Iih	INPUT CURRENT /Internal pull low		3		3		uA	4MHz, RM in HALT Mode (IO Ports with weak pull-high pull-low)
			5		9			
			5		-5.2			
Ioh	OUTPUT HIGH CURRENT		3		-3		mA	4MHz, RM (IO ports)
			5		-8			
Iol	OUTPUT LOW CURRENT		3		7			
			5		20			
Cout	DA CURRENT OUT (FULL SCALE)		3		4			
			5		5.2			
dF/F	FREQUENCY STABILITY			-10		10	%	Fosc(3v- 2.4v) / Fosc (3v)
dF/F	Fosc VARIATION			-20		20	%	VDD=3V, Rosc=820k, 4MHz

FIGURE 1.3 : Frequency Range for Rosc in RM mode
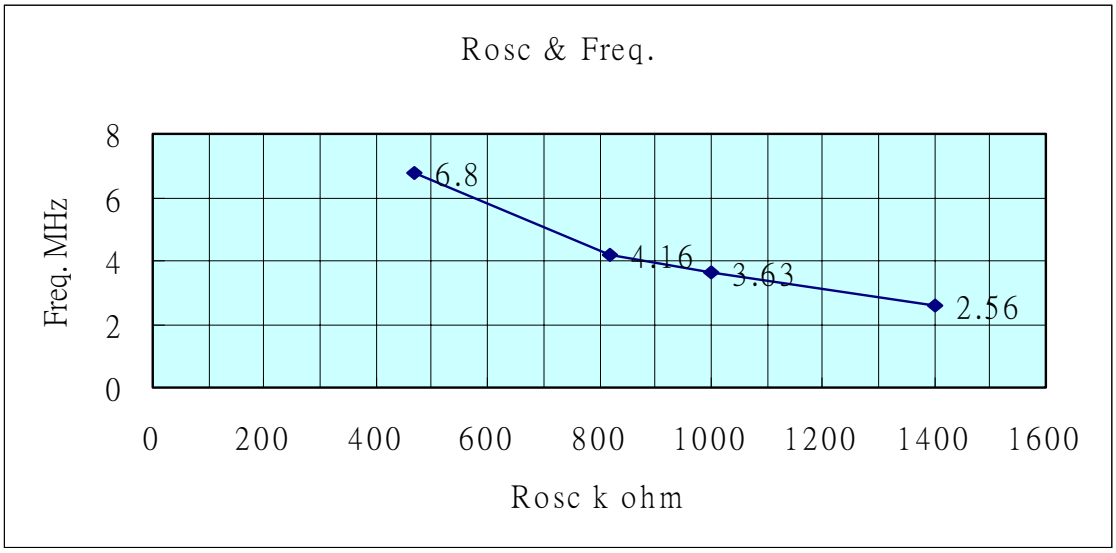
Resistor(k ohm)	1400	1000	820	470
3v Freq.(MHz)	2.56	3.63	4.16	6.80