high performance needs great design.

Datasheet: AS5261 12-Bit Automotive Angle Position Sensor

Please be patient while we update our brand image as austriamicrosystems and TAOS are now ams.

AS5261

12-Bit Automotive Angle Position Sensor

1 General Description

The AS5261 is a contactless magnetic angle position sensor for accurate angular measurement over a full turn of 360°. A sub range can be programmed to achieve the best resolution for the application. It is a system-on-chip, combining integrated Hall elements, analog front end, digital signal processing and best in class automotive protection features in a single device.

To measure the angle, only a simple two-pole magnet, rotating over the center of the chip, is required. The magnet may be placed above or below the IC.

The absolute angle measurement provides instant indication of the magnet's angular position with a resolution of 0.022° = 16384 positions per revolution. According to this resolution the adjustment of the application specific mechanical positions are possible. The angular output data is available over a 12 bit PWM output.

The AS5261 operates at a supply voltage of 5V and the supply and output pins are protected against overvoltage up to +20V. In addition the supply pins are protected against reverse polarity up to –20V.

Figure 1. Typical Arrangement of AS5261 *and magnet*

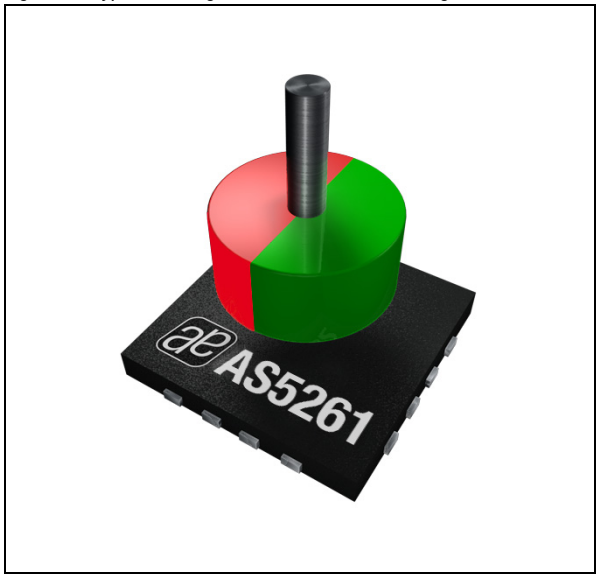

2 Key Features

- 360º contactless high resolution angular position encoding
- User programmable start and end point of the application region + linearization.
- User programmable clamping levels and programming of the transition point.
- Wide temperature range: - 40ºC to + 150ºC
- Small Pb-free package: MLF 16 6x6 (with dimple)
- Broken GND and VDD detection

3 Benefits

- Unique fully differential solution
- Best protections for automotive applications
- Easy to program
- Additional linearization points for output characteristic
- Ideal for applications in harsh environments due to contactless position sensing
- Robust system, tolerant to magnet misalignment, air gap variations, temperature variations and external magnetic fields
- High inherent accuracy
- Stacked die redundant approach

4 Applications

The AS5261 is ideal for automotive applications like throttle and valve position sensing, gearbox position sensor, pedal position sensing and contactless potentiometers.

Figure 2. AS5261 Block Diagram

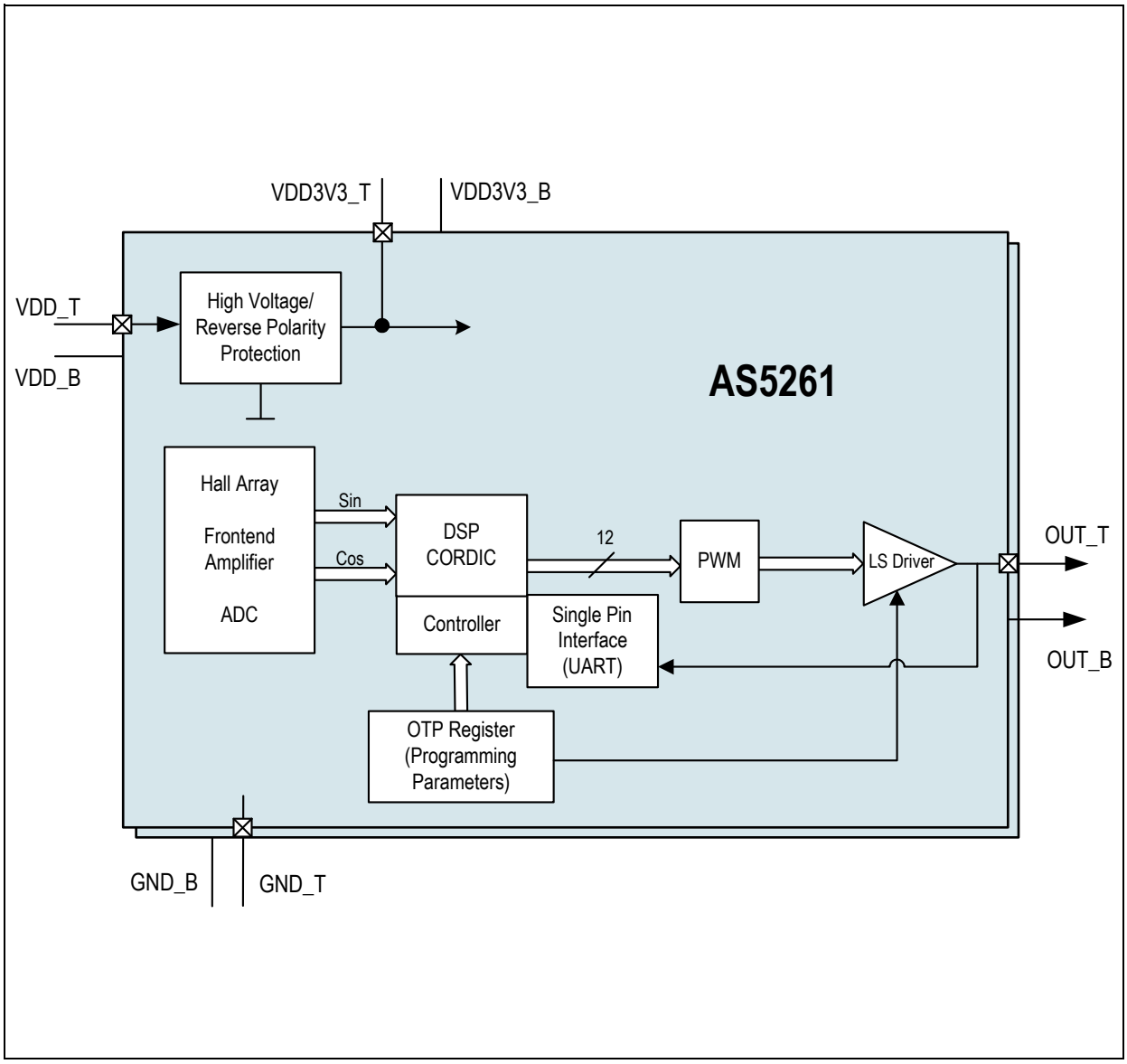

Contents

1 General Description 1
2 Key Features 1
3 Benefits 1
4 Applications 1
5 Pin Assignments 4
5.1 Pin Descriptions 4
6 Absolute Maximum Ratings 5
7 Electrical Characteristics 6
7.1 Operating Conditions 6
7.2 Magnetic Input Specification 6
7.3 Electrical System Specifications 7
7.4 Timing Characteristics 7
8 Detailed Description 8
8.1 Operation 8
8.1.1 VDD Voltage Monitor 8
8.2 PWM Output 8
8.2.1 Programming Parameters 9
8.2.2 Application Specific Angular Range Programming 9
8.2.3 Application Specific Programming of the Break Point 10
8.2.4 Multiple Slope Output 10
8.2.5 Linearization of the Output 12
8.2.6 Resolution of Parameters 12
8.2.7 Noise Suppressor 14
8.2.8 Hysteresis Function 14
8.3 PWM Output Driver Parameters 14
9 Application Information 15
9.1 Recommended Application Schematic 15
9.2 Programming the AS5261 15
9.2.1 UART Interface for Programming 16
9.2.2 Frame Organization 16
9.2.3 READ 17
9.2.4 WRITE 17
9.2.5 Baud Rate Setup 18
9.3 OTP Programming Data 19
9.4 READ / WRITE Register Map 23
9.5 READ Only Register Map 24
9.6 Special Registers 26
9.7 Programming Procedure 27
10 Package Drawings and Markings 28
11 Ordering Information 31

5 Pin Assignments

Figure 3. MLF-16 Pin Configuration (View from Top)

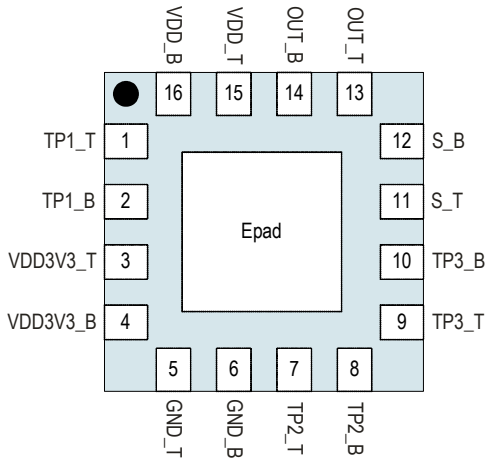

5.1 Pin Descriptions

Table 1. MLF-16 Pin Descriptions

Pin Number	Pin Name	Pin Type	Description
1	TP1_T	DIO/AIO Multi purpose pin	Test pin for fabrication. Connected to ground in the application.
2	TP1_B		Test pin for fabrication. Connected to ground in the application.
3	VDD3V3_T	AIO	Output of the LDO. 1µF required.
4	VDD3V3_B		Output of the LDO. 1µF required.
5	GND_T	Supply pin	Ground pin. Connected to ground in the application.
6	GND_B		Ground pin. Connected to ground in the application.
7	TP2_T	DIO/AIO Multi purpose pin	Test pin for fabrication. Connected to ground in the application.
8	TP2_B		Test pin for fabrication. Connected to ground in the application.
9	TP3_T		Test pin for fabrication. Left open in the application.
10	TP3_B		Test pin for fabrication. Left open in the application.
11	S_T	AIO	Test pin for fabrication. Connected to OUT_T in the application. (special case for the connection possible → 4-wire mode)
12	S_B		Test pin for fabrication. Connected to OUT_B in the application. (special case for the connection possible → 4-wire mode)
13	OUT_T	Digital output/Digital PWM output	PWM output pin. Open drain configuration. Programming pin.
14	OUT_B		PWM output pin. Open drain configuration. Programming pin.
15	VDD_T	Supply pin	Positive supply pin. This pin is over voltage protected.
16	VDD_B		Positive supply pin. This pin is over voltage protected.

6 Absolute Maximum Ratings

Stresses beyond those listed in Table 2 may cause permanent damage to the device. These are stress ratings only, and functional operation of the device at these or any other conditions beyond those indicated in Electrical Characteristics on page 6 is not implied. Exposure to absolute maximum rating conditions for extended periods may affect device reliability.

Table 2. Absolute Maximum Ratings

Symbol	Parameter	Min	Max	Units	Comments
Electrical Parameters					
V_{DD}	DC supply voltage at pin VDD Overvoltage	-20	20	V	No operation
V_{OUT}	Output voltage OUT	-0.3	20	V	Permanent
V_{DD3V3}	DC supply voltage at pin V_{DD3V3}	-0.3	5	V	
I_{scr}	Input current (latchup immunity)	-100	100	mA	Norm: AEC-Q100-004
Electrostatic Discharge					
ESD	Electrostatic discharge		±2	kV	Norm: AEC-Q100-002
Temperature Ranges and Storage Conditions					
T_{strg}	Storage temperature	-55	+150	ºC	Min -67ºF; Max +257ºF
T_{Body}	Body temperature		260	ºC	The reflow peak soldering temperature (body temperature) specified is in accordance with IPC/JEDEC J-STD-020 “Moisture/Reflow Sensitivity Classification for Non-Hermetic Solid State Surface Mount Devices”. The lead finish for Pb-free leaded packages is matte tin (100% Sn).
H	Humidity non-condensing	5	85	%	
MSL	Moisture Sensitive Level	3			Represents a maximum floor life time of 168h

7 Electrical Characteristics

7.1 Operating Conditions

In this specification, all the defined tolerances for external components need to be assured over the whole operation conditions range and also over lifetime.

Table 3. Operating Conditions

Symbol	Parameter	Conditions	Min	Typ	Max	Units
T_{AMB}	Ambient temperature	-40ºF…+302ºF	-40		+150	ºC
I_{supp}	Supply current	Only for one die. Must be multiplied by 2			10	mA
V_{DD}	Supply voltage at pin VDD		4.5	5.0	5.5	V

7.2 Magnetic Input Specification

T_{AMB} = -40 to +150ºC, VDD = 4.5 to 5.5V (5V operation), unless otherwise noted.

Two-pole cylindrical diametrically magnetized source:

Table 4. Magnetic Input Specification

Symbol	Parameter	Conditions	Min	Typ	Max	Units
B_{pk}	Magnetic input field amplitude	Required vertical component of the magnetic field strength on the die's surface, measured along a concentric circle with a radius of 1.25 mm	30		70	mT
B_{pkext}	Magnetic input field amplitude (extended) default setting	Required vertical component of the magnetic field strength on the die's surface, measured along a concentric circle with a radius of 1.25 mm. Increased sensor output noise.	10		90	mT
B_{off}	Magnetic offset	Constant magnetic stray field			± 5	mT
D_{isp}	Displacement radius	Offset between defined device center and magnet axis. Dependent on the selected magnet. Including Eccentricity.		1		mm

7.3 Electrical System Specifications

T_{AMB} = -40 to +150ºC, VDD = 4.5 - 5.5V (5V operation), Magnetic Input Specification, unless otherwise noted.

Table 5. Electrical System Specifications

Symbol	Parameter	Conditions	Min	Typ	Max	Units
RES	Resolution PWM Output	Range > 90º			12	bit
INL_{opt}	Integral non-linearity (optimum)	Best aligned reference magnet at 25ºC over full turn 360º.			0.5	deg
INL_{temp}	Integral non-linearity (optimum)	Best aligned reference magnet over temperature -40 -150º over full turn 360º.			0.9	deg
INL	Integral non-linearity	Best aligned reference magnet over temperature -40 -150º over full turn 360º and displacement			1.4	deg
ON_{F0}	Output Noise	At 14 bit angular information, 360º mode. Internal Filter disabled.			±5	LSB
ON_{F1}		At 14 bit angular information, 360º mode. Filter setting 1.			±3	LSB
ON_{F2}		At 14 bit angular information, 360º mode. Filter setting 2.			±2	LSB
ON_{F3}		At 14 bit angular information, 360º mode. Filter setting 3. Jitter free.			±0.5	LSB
t_{PwrUp}	Power-up time 0-5V	Power up time 5V operation. Default Power up.			10	ms
t_{delay}	System propagation delay absolute output: delay of ADC, DSP and absolute interface				300	µs

7.4 Timing Characteristics

Table 6. Timing Conditions

Symbol	Parameter	Conditions	Min	Typ	Max	Units
T_{DETWD}	WachDog error detection time				12	ms

8 Detailed Description

The AS5261 is manufactured in a CMOS process and uses a spinning current Hall technology for sensing the magnetic field distribution across the surface of the chip. This IC consists of two galvanic isolated dies. All following in and register names refers to one die.

The integrated Hall elements are placed around the center of the device and deliver a voltage representation of the magnetic field at the surface of the IC.

Through Sigma-Delta Analog / Digital Conversion and Digital Signal-Processing (DSP) algorithms, the AS5261 provides accurate high-resolution absolute angular position information. For this purpose a Coordinate Rotation Digital Computer (CORDIC) calculates the angle and the magnitude of the Hall array signals.

The DSP is also used to provide digital information at the outputs that indicate movements of the used magnet towards or away from the device's surface.

A small low cost diametrically magnetized (two-pole) standard magnet provides the angular position information.

The AS5261 senses the orientation of the magnetic field and calculates a 14-bit binary code. This code is mapped to a programmable output characteristic in a PWM duty cycle format. This signal is available at the pin (**OUT**).

The application angular region can be programmed in a user friendly way. The start angle position **T1** and the end point **T2** can be set and programmed according the mechanical range of the application with a resolution of 14 bits. In addition the **T1Y** and **T2Y** parameter can be set and programmed according the application. The transition point 0 to 360 degree can be shifted using the break point parameter **BP**. The voltage for clamping level low **CLL** and clamping level high **CLH** can be programmed with a resolution of 9 bits. Both levels are individually adjustable. Two additional linearization points can be used to improve the system linearity. These points **C1** and **C2** are programmable.

The output parameters can be programmed in an OTP register. No additional voltage is required to program the AS5261. The setting may be overwritten at any time and will be reset to default when power is cycled. To make the setting permanent, the OTP register must be programmed by using a lock bit the content could be frozen for ever.

The AS5261 is tolerant to magnet misalignment and unwanted external magnetic fields due to differential measurement technique and Hall sensor conditioning circuitry.

8.1 Operation

8.1.1 VDD Voltage Monitor

VDD Over Voltage Management. If the voltage applied to the **VDD** pin exceeds the over-voltage upper threshold for longer than the detection time the output is turned off. When the over voltage event has passed and the voltage applied to the **VDD** pin falls below the over-voltage lower threshold for longer than the recovery time the device enters the normal mode and the output is enabled.

VDD Under Voltage Management. When the voltage applied to the **VDD** pin falls below the under-voltage lower threshold for longer than the detection time the output is turned off. When the voltage applied to the **VDD** pin exceeds the under-voltage upper threshold for longer than the detection time the device enters the normal mode and the output is enabled.

8.2 PWM Output

By default (after programmed **CUST_LOCK** OTP bit) the PWM output mode is selected. The pin **OUT** provides a modulated signal that is proportional to the angle of the rotating magnet. Due to an intelligent approach a permanent short circuit will not damage the device. This is also feasible in a high voltage condition up to 20 V and at the highest specified ambient temperature.

After the digital signal processing (DSP) a PWM engine provides the output signal.

The DSP maps the application range to the output characteristic. An inversion of the slope is also programmable to allow inversion of the rotation direction.

An on-chip diagnostic feature handles the error state at the output. Depending on the failure the output is in HiZ condition or indicates a PWM signal within the failure bands of 4 – 96 % duty cycle. (see Table 8)

8.2.1 Programming Parameters

The PWM output characteristic is programmable by OTP. Depending on the application, the output can be adjusted. The user can program the following application specific parameters:

T1	Mechanical angle start point
T2	Mechanical angle end point
T1Y	% duty cycle level at the T1 position
T2Y	% duty cycle level at the T2 position
CLL	Clamping Level Low
CLH	Clamping Level High
BP	Break point (transition point 0 to 360º)
C1	Calibration Point 1
C2	Calibration Point 2
C1Y	Trim value for C1
C2Y	Trim value for C2

These parameters are input parameters. Using the available programming software and programmer these parameters are converted and finally written into the AS5261 128 bit OTP memory.

8.2.2 Application Specific Angular Range Programming

The application range can be selected by programming **T1** with a related **T1Y** and **T2** with a related **T2Y** into the AS5261. The clamping levels **CLL** and **CLH** can be programmed independent from the **T1** and **T2** position and both levels can be separately adjusted.

Figure 4. Programming of an Individual Application Range

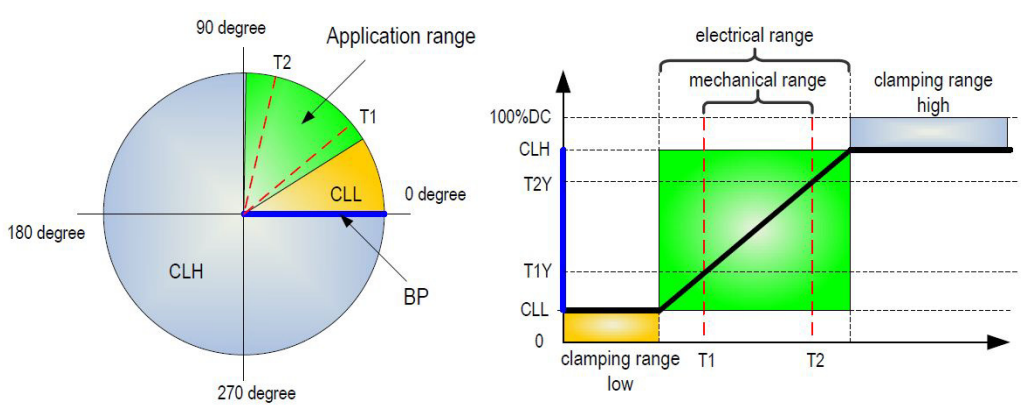

Figure 4 shows a simple example of the selection of the range. The mechanical starting point **T1** and the mechanical end point **T2** are defining the mechanical range. A sub range of the internal Cordic output range is used and mapped to the needed output characteristic. The PWM output signal has 12 bit, hence the level **T1Y** and **T2Y** can be adjusted with this resolution. As a result of this level and the calculated slope the clamping region low is defined. The break point **BP** defines the transition between **CLL** and **CLH**. In this example the **BP** is set to 0º. The **BP** is also the end point of the clamping level high **CLH**. This range is defined by the level CLH and the calculated slope. Both clamping levels can be set independently form each other. The minimum application range is 9.8º.

8.2.3 Application Specific Programming of the Break Point

The break point **BP** can be programmed as well with 14 bits. This is important when the default transition point is inside the application range. In such a case the default transition point must be shifted out of the application range. The parameter **BP** defines the new position.

Figure 5. Individual Programming of the Break Point BP

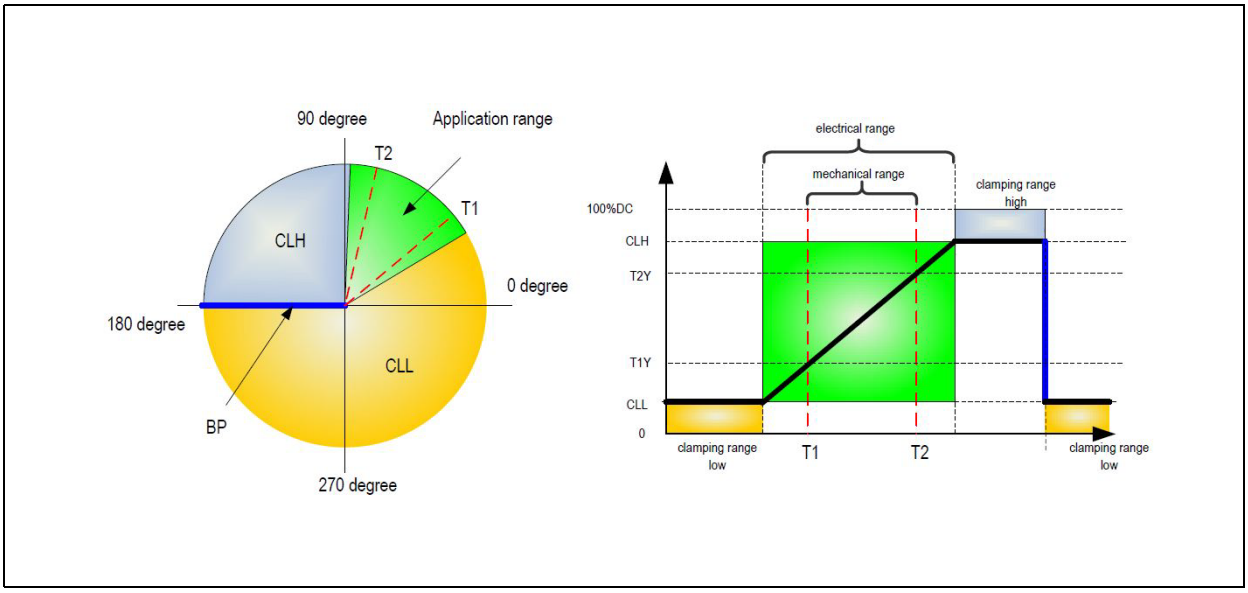

8.2.4 Multiple Slope Output

The AS5261 can be programmed to multiple slopes. Where one programmed reference slope characteristic is copied to multiple slopes. Two, three and four slopes are selectable by the user OTP bits **QUADEN (1:0)**. In addition to the steepness of the slope the clamping levels can be programmed as well.

Figure 6. Two Slope Mode

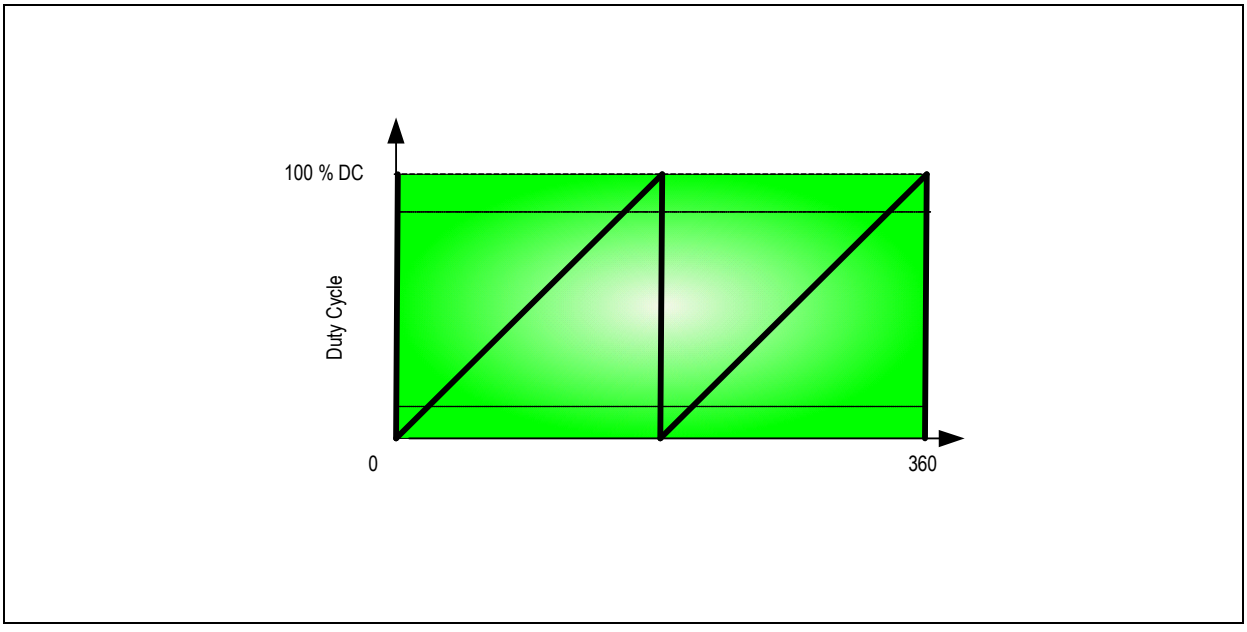

Figure 7. Four Slope Mode

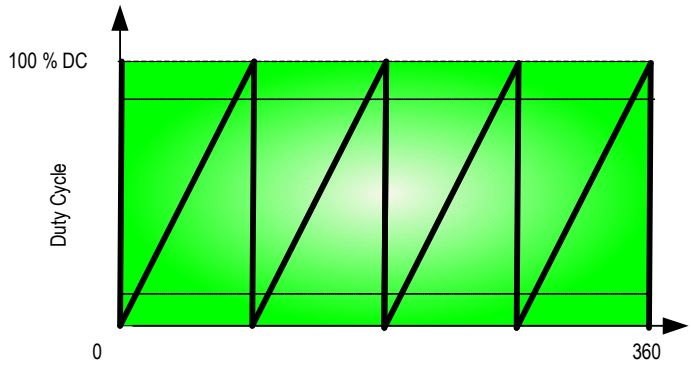

8.2.5 Linearization of the Output

To improve the system linearity an additional 2 point linearization function is implemented in the AS5261.

Figure 8. Linearization of the Output Characteristic

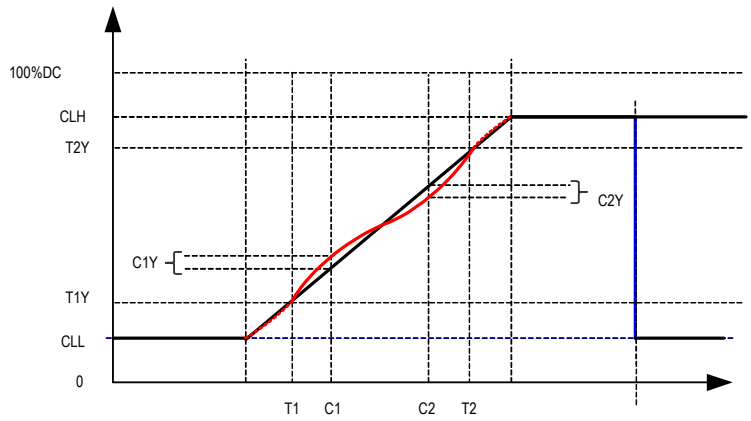

8.2.6 Resolution of Parameters

The programming parameters have a wide resolution of up to 14 bits.

Table 7. Resolution of the Programming Parameters

Symbol	Parameter	Resolution	Note
T1	Mechanical angle start point	14 bits	
T2	Mechanical angle stop point	14 bits	
T1Y	Mechanical start voltage level	12 bits	
T2Y	Mechanical stop voltage level	12 bits	
CLL	Clamping level low	9 bits	
CLH	Clamping level high	9 bits	
BP	Break point	14 bits	
C1	Calibration Point 1	4 bits	
C2	Calibration Point 2	4 bits	
C1Y	Trim value C1	3 bits	
C2Y	Trim value C2	3 bits	

Figure 9. Overview Output Range

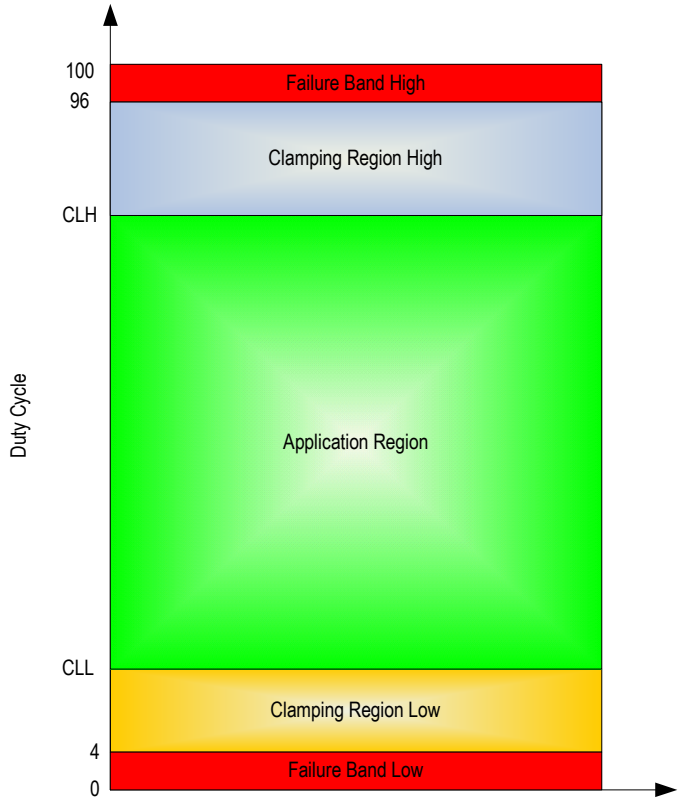

Figure 9 gives an overview about the different ranges. The failure bands are used to indicate a wrong operation of the AS5261. This can be caused due to a broken supply line. By using the specified load resistors the output level will remain in these bands during a fail. It is recommended to set the clamping level **CLL** above the lower failure band and the clamping level **CLH** below the higher failure band.

- $C_{LOAD} \leq 33$ nF, RPU= 1k…10kΩ

Table 8. Different Failure Cases of AS5261

Type	Failure Mode	Symbol	Failure Band	Note
Internal alarms (failures)	Out of magnetic range (too less or too high magnetic input)	MAGRng	High/Low	Programmable by OTP bit **DIAG_HIGH**
	Cordic overflow	COF	High/Low	Programmable by OTP bit **DIAG_HIGH**
	Offset compensation finished	OCF	High/Low	Programmable by OTP bit **DIAG_HIGH**
	Watchdog fail	WDF	High/Low	Programmable by OTP bit **DIAG_HIGH**
	Oscillator fail	OF	High/Low	Programmable by OTP bit **DIAG_HIGH**
Application related failures	Overvoltage condition	OV	High	Dependant on the load resistor Pull up → failure band high
	Broken VDD	BVDD		
	Broken VSS	BVSS		
	Short circuit output	SCO	High	Switch off → short circuit dependent

For efficient use of diagnostics, it is recommended to program to clamping levels **CLL** and **CLH**.

8.2.7 Noise Suppressor

The noise suppressor is inserted on two levels of the DSP chain. The first stage, on the output of the Cordic block, is capable to reduce the noise level up to 1 LSB peak to peak. The second stage, on the output of the straight-line tracer, reduces the impact of the post processing. In fact depending on the programmed operating angular sector the gain module amplifies also the noise level up to 8 LSB peak to peak and the second stage of the noise suppressor reduces it again to 1 LSB peak to peak.

Four possible configurations of the noise suppressor can be selected via the OTP bits **FILTERCFG<1:0>**.

8.2.8 Hysteresis Function

AS5261 device includes a hysteresis function to avoid sudden jumps from CLH to CLL and vice versa caused by noise in the full turn configuration.

The hysteresis amplitude can be selected via the OTP bits **HYSTSEL<1:0>**.

8.3 PWM Output Driver Parameters

The output stage is configured in a open drain output.

The PWM duty cycle represents the angular output data. All programming features are available for the PWM mode as well. The PWM period is programmable in four steps and can be programmed by **PWMF<2:0>**.

$C_{LOAD} \leq$ 33 nF, R_{PU}= 1k…10kΩ

Table 9. PWM Parameters Output Driver

Symbol	Parameter	Conditions	Min	Typ	Max	Units
PWMF1	PWM frequency 7	PWMF<2:0>=111	109.86	122	134.28	Hz
PWMF2	PWM frequency 6	PWMF<2:0>=110	179.78	200	219.73	Hz
PWMF3	PWM frequency 5	PWMF<2:0>=101	219.73	244	268.55	Hz
PWMF4	PWM frequency 4	PWMF<2:0>=100	329.59	366	402.83	Hz
PWMF5	PWM frequency 3	PWMF<2:0>=011	494.38	549	604.25	Hz
PWMF6	PWM frequency 2	PWMF<2:0>=010	659.18	732	805.66	Hz
PWMF7	PWM frequency 1	PWMF<2:0>=001	988.77	1100	1208.50	Hz
PWMF8	PWM frequency 0	PWMF<2:0>=000	1977.54	2197	2416.2	Hz
PWMDC	PWM duty cycle range	info parameter	4		96	%
PWMVOL	Output voltage low	IOUT=5mA	0		0.4	V
PWMSRF	PWM slew rate (falling edge)	Between 75% and 25% RPUOUT=4KΩ; CLOUT=1nF VDD=5V	1	2	4	V / µs

9 Application Information

9.1 Recommended Application Schematic

Figure 10 shows the recommended schematic in the application. All components marked with (*) are optional and can be used to further increase the EMC.

Figure 10. AS5261 6-Wire Connection with Pull-Up Resistors

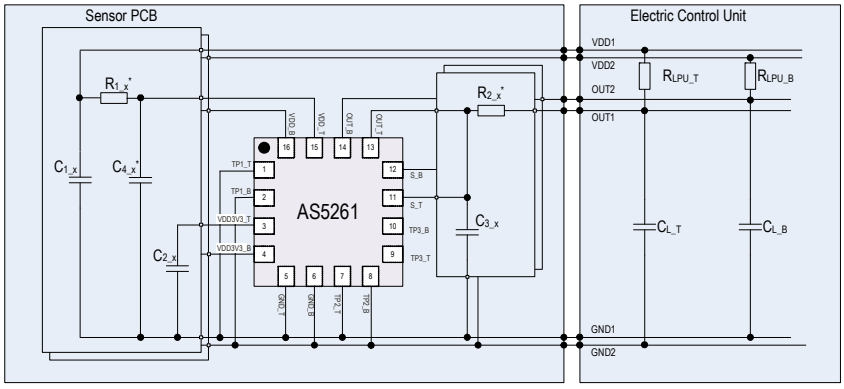

Table 10. External Components

Symbol	Parameter	Min	Typ	Max	Unit	Note
C_1	VDD buffer capacitor	0.8	1	1.2	µF	Low ESR 0.3 Ω
C_2	VDD3V3 regulator capacitor	0.8	1	1.2	µF	Low ESR 0.3 Ω
C_3	OUT load capacitor (sensor PCB)	0		4.7	nF	
C_4^*	VDD capacitor (optional)		4.7		nF	Do not increase due to programming over output.
R_1^*	VDD serial resistor (optional)		10		Ω	
C_L	OUT load capacitor (ECU)	0		33	nF	
R_2^*	OUT serial resistor (optional)		50		Ω	
R_{LPU}	OUT pull-up resistance	4		10	kΩ	

9.2 Programming the AS5261

The AS5261 programming is a one-time-programming (OTP) method, based on polysilicon fuses. The advantage of this method is that no additional programming voltage is needed. The internal LDO provides the current for programming.

The OTP consists of 128 bits; several bits are available for user programming. In addition factory settings are stored in the OTP memory. Both regions are independently lockable by build in lock bits.

A single OTP cell can be programmed only once. Per default, the cell is “0”; a programmed cell will contain a “1”. While it is not possible to reset a programmed bit from “1” to “0”, multiple OTP writes are possible, as long as only unprogrammed “0”-bits are programmed to “1”.

Independent of the OTP programming, it is possible to overwrite the OTP register temporarily with an OTP write command. This is possible only if the user lock bit is not programmed.

Due to the programming over the output pin the device will initially start in the communication mode. In this mode the digital angle value can be read with a specific protocol format. It is a bidirectional communication possible. Parameters can be written into the device. A programming of the device is triggered by a specific command. With another command (pass2func) the device can be switched into operation mode. In case of a programmed user lock bit the AS5261 automatically starts up in the functional operation mode. No communication of the specific protocol is possible after this.

A standard half duplex UART protocol is used to exchange data with the device in the communication mode.

9.2.1 UART Interface for Programming

The AS5261 uses a standard UART interface with a byte for address and two bytes for the data content. The read or write mode is selected in the first byte. An even parity for every byte. The timing (baudrate) is selected by the AS5261 over an initial command from the master. The baud rate register can be read and overwritten. The keep synchronization it AS5261 synchronizes art every Start bit. This happens during a standard write access 3 times.

A time out function detects not complete commands and resets the AS5261 UART after the timeout period.

9.2.2 Frame Organization

Each frame is composed by 24 bits. The first byte (Address or Command) of the frame specifies the read/write operation with the register address or is used for a command. 16 data bits contains the communication data. There will be no operation in case of the usage of a not specified CMD. The UART programming interface block of the AS5261 can operate in slave communication or master communication mode. In the slave communication mode the AS5261 receives the data. The programming tool is the driver of the single communication line. In case of the master comunication mode the AS5261 transmits data in the frame format. The single communication line can be pulled down by the AS5261.

Table 11. OTP Commands and Communication

Possible Interface Commands	Address / Command	AS5X63 Communication Mode	Description
WRITE	0x00-0x0F (OTP) 0x10-0x1F (SFR) 0x20-0xFF (Special Mode)	SLAVE	Write related to the address the user data
READ	0x00-0x0F (OTP) 0x10-0x1F (SFR) 0x20-0xFF (Special Mode)	SLAVE and MASTER	Read related to the address the user data
FUSE	0x22+ key	SLAVE	Command for permanent programming
PASS2FUNC	0x23+ key	SLAVE	Change operation mode from communication to operation

9.2.3 READ

Figure 11 shows the format of the frame:

Figure 11. Organization of the READ Command

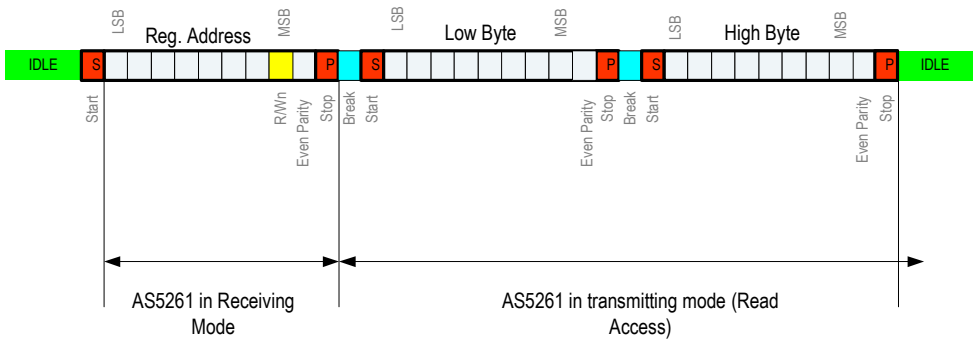

The R/Wn bit in the first byte selects the mode. Between the data packets is always a break state. The break state has the same length as the other data bits.

An even parity bit is used to guarantee a correct data transmission. The parity bit is generated by the 8 bits.

9.2.4 WRITE

Figure 12 shows the format of the frame:

Figure 12. Organization of the READ Command

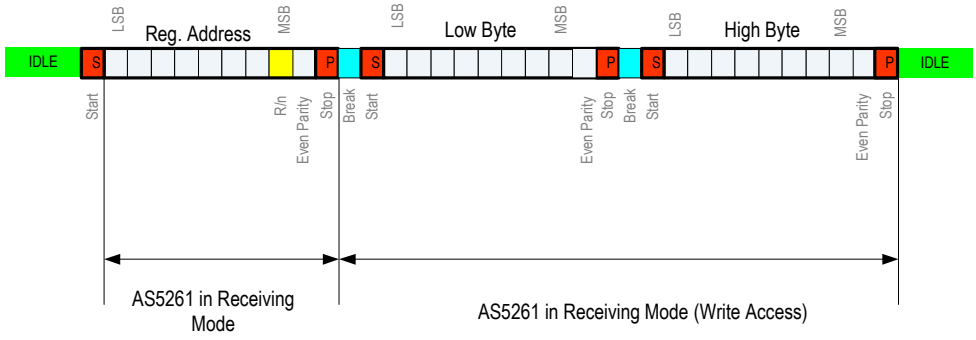

9.2.5 Baud Rate Setup

Due to the internal RC oscillator the AS5261 needs to synchronize to the master. This happens after startup with the first baud rate command. This register address is reserved after the first successful setup for a possible manual setting of the baud rate.

Figure 13. Baud Rate Setup

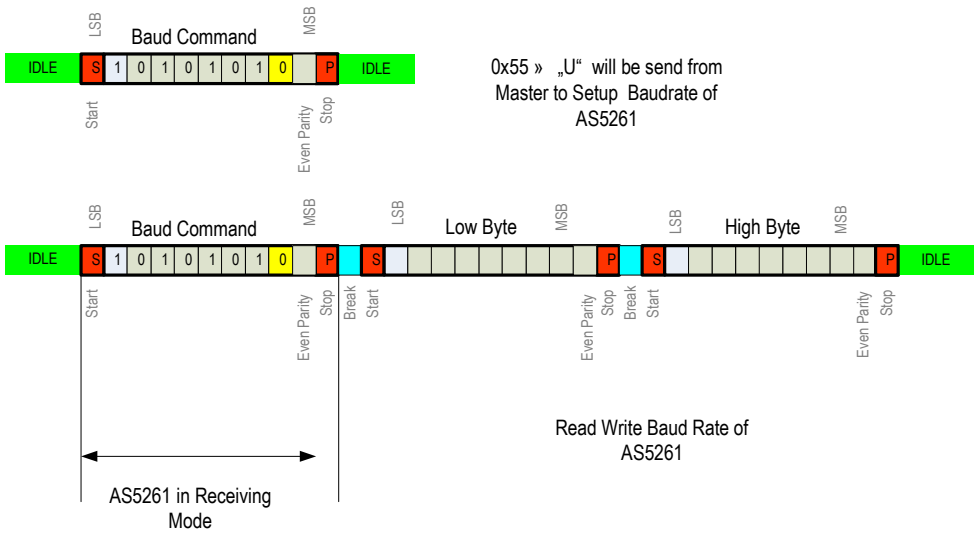

9.3 OTP Programming Data

Table 12. OTP Memory Map

Data Byte	Bit Number	Symbol	Default	Description	
DATA15 (0x0F)	0	Factory Settings	0	AMS (reserved)	Factory Settings
	1		0		
	2		0		
	3		0		
	4		0		
	5		0		
	6		0		
	7		0		
DATA14 (0x0E)	0		0		
	1		0		
	2		0		
	3		0		
	4		0		
	5		0		
	6		0		
	7		0		
DATA13 (0x0D)	0		0		
	1		0		
	2	CUSTID<0>	0	Customer Identifier	Customer Settings
	3	CUSTID<1>	0		
	4	CUSTID<2>	0		
	5	CUSTID<3>	0		
	6	CUSTID<4>	0		
	7	CUSTID<5>	0		
DATA12 (0x0C)	0	CUSTID<6>	0		
	1	X2LIN<0>	0	Second linearization point (X-axis)	
	2	X2LIN<1>	0		
	3	X2LIN<2>	0		
	4	X2LIN<3>	0		
	5	X1LIN<0>	0	First linearization point (X-axis)	
	6	X1LIN<1>	0		
	7	X1LIN<2>	0		
DATA11 (0x0B)	0	X1LIN<3>	0		
	1	Y1LIN<0>	0	First linearization point (Y-axis)	

Table 12. OTP Memory Map

Data Byte	Bit Number	Symbol	Default	Description	
	2	Y1LIN<1>	0	First linearization point (Y-axis)	Customer Settings
	3	Y1LIN<2>	0		
	4	Y2LIN<0>	0	Second linearization point (Y-axis)	
	5	Y2LIN<1>	0		
	6	Y2LIN<2>	0		
	7	CLH<0>	0	Clamping Level High	
DATA10 (0x0A)	0	CLH<1>	0		
	1	CLH<2>	0		
	2	CLH<3>	0		
	3	CLH<4>	0		
	4	CLH<5>	0		
	5	CLH<6>	0		
	6	CLH<7>	0		
	7	CLH<8>	0		
DATA9 (0x09)	0	CLL<0>	0	Clamping Level Low	
	1	CLL<1>	0		
	2	CLL<2>	0		
	3	CLL<3>	0		
	4	CLL<4>	0		
	5	CLL<5>	0		
	6	CLL<6>	0		
	7	CLL<7>	0		
DATA8 (0x08)	0	CLL<8>	0		
	1	OFFSET<0>	0	Offset	
	2	OFFSET<1>	0		
	3	OFFSET<2>	0		
	4	OFFSET<3>	0		
	5	OFFSET<4>	0		
	6	OFFSET<5>	0		
	7	OFFSET<6>	0		
DATA7 (0x07)	0	OFFSET<7>	0		
	1	OFFSET<8>	0		
	2	OFFSET<9>	0		
	3	OFFSET<10>	0		
	4	OFFSET<11>	0		
	5	OFFSET<12>	0		
	6	OFFSET<13>	0		
	7	OFFSET<14>	0		

Table 12. OTP Memory Map

Data Byte	Bit Number	Symbol	Default	Description	
DATA6 (0x06)	0	OFFSET<15>	0	Offset	Customer Settings
	1	OFFSET<16>	0		
	2	OFFSET<17>	0		
	3	OFFSET<18>	0		
	4	OFFSET<19>	0		
	5	GAIN<0>	0	Scale Factor	
	6	GAIN<1>	0		
	7	GAIN<2>	0		
DATA5 (0x05)	0	GAIN<3>	0		
	1	GAIN<4>	0		
	2	GAIN<5>	0		
	3	GAIN<6>	0		
	4	GAIN<7>	0		
	5	GAIN<8>	0		
	6	GAIN<9>	0		
	7	GAIN<10>	0		
DATA4 (0x04)	0	GAIN<11>	0		
	1	GAIN<12>	0		
	2	GAIN<13>	0		
	3	GAIN<14>	0		
	4	GAIN<15>	0		
	5	GAIN<16>	0		
	6	BP<0>	0	Break Point	
	7	BP<1>	0		
DATA3 (0x003)	0	BP<2>	0		
	1	BP<3>	0		
	2	BP<4>	0		
	3	BP<5>	0		
	4	BP<6>	0		
	5	BP<7>	0		
	6	BP<8>	0		
	7	BP<9>	0		
DATA2 (0x02)	0	BP<10>	0		
	1	BP<11>	0		
	2	BP<12>	0		
	3	BP<13>	0		
	4	ANGLERNG	0	Sector selection 0=Angular Sector≥22.5 degrees; 1=Angular Sector<22.5 degrees	
	5	DIAG_HIGH	0	Failure Band Selection 0=Failure Band Low 1=Failure Band High	

Table 12. OTP Memory Map

Data Byte	Bit Number	Symbol	Default	Description	
DATA2 (0x02)	6	QUADEN<0>	0	Quadrant Mode Enable 00=1quadrant;01=2quadrants; 10=3 quadrants;11=4 quadrants	Customer Settings
	7	QUADEN<1>	0		
DATA1 (0x01)	0	AIRGAPSEL	0	Magnetic input range extension 0:extended range;1=normal range	
	1	HYSTSEL<0>	0	Hysteresis selection 00=no hysteresis; 01: 56LSB; 10=91LSB; 11=137LSB	
	2	HYSTSEL<1>	0		
	3	FILTERCFG<0>	0	Filter Configuration 00=no filter; 01= fast; 10=moderate; 11=slow	
	4	FILTERCFG<1>	0		
	5	Not used	0		
	6	Not used	0		
	7	Not used	0		
DATA0 (0x00)	0	RED_ADD<0>	0	Redundancy Address Identify the address of the byte containing the bit to be changed	
	1	RED_ADD<1>	0		
	2	RED_ADD<2>	0		
	3	RED_ADD<3>	0		
	4	RED_BIT<0>	0	Redundancy Bit Identify the position of the bit to be changed in the byte at the address RED_ADD<3:0>	
	5	RED_BIT<1>	0		
	6	RED_BIT<2>	0		
	7	CUST_LOCK	0	Lock bit for Customer Area	

9.4 READ / WRITE Register Map

Table 13. Read / Write Registers

Data Byte	Bit Number	Symbol	Default	Description	
DATA0 (0x20)	0	BAUDREG<0>	0	UART Baud Rate Register	Read/Write Area
	1	BAUDREG<1>	0		
	2	BAUDREG<2>	0		
	3	BAUDREG<3>	0		
	4	BAUDREG<4>	0		
	5	BAUDREG<5>	0		
	6	BAUDREG<6>	0		
	7	BAUDREG<7>	0		
DATA1 (0x21)	0	BAUDREG<8>	0		
	1	Not used	0	A read command returns all data bits at 0	
	2	Not used	0		
	3	Not used	0		
	4	Not used	0		
	5	Not used	0		
	6	Not used	0		
	7	Not used	0		
DATA2 (0x22)	0	Not used	0		
	1	Not used	0		
	2	Not used	0		
	3	Not used	0		
	4	Not used	0		
	5	R1K10K<0>	0	Selection of the reference resistance used for OTP download	
	6	R1K10K<1>	0		
	7	DSPRN	0	Resetn of the Digital Signal Processing circuit	

9.5 READ Only Register Map

Table 14. Read Only Registers

Data Byte	Bit Number	Symbol	Default	Description	
DATA0 (0x28)	0	Not used	0	A read command returns 0	Read Area
	1	OFFSETFINISHED	0	Offset compensation finished	
	2	AGCFINISHED	0	AGC loop compensation finished	
	3	CORDICOVF	0	Overflow of the Cordic	
	4	AGCALARML	0	AGC loop saturation because of B field too strong	
	5	AGCALARMH	0	AGC loop saturation because of B field too weak	
	6	OTP_RES	0	0=1K resistance selected for OTP download; 1=10K resistance selected for OTP download	
	7	PARITY_ERR	0	UART parity error flag	
DATA1 (0x29)	0	CORDICOUT<0>	0	Cordic Output	
	1	CORDICOUT<1>	0		
	2	CORDICOUT<2>	0		
	3	CORDICOUT<3>	0		
	4	CORDICOUT<4>	0		
	5	CORDICOUT<5>	0		
	6	CORDICOUT<6>	0		
	7	CORDICOUT<7>	0		
DATA2 (0x2A)	0	CORDICOUT<8>	0		
	1	CORDICOUT<9>	0		
	2	CORDICOUT<10>	0		
	3	CORDICOUT<11>	0		
	4	CORDICOUT<12>	0		
	5	CORDICOUT<13>	0		
	6	Not used	0	A read command returns all data bits at 0	
	7	Not used	0		
DATA3 (0x2B)	0	DSPOUT<0>	0	DSP Output	
	1	DSPOUT<1>	0		
	2	DSPOUT<2>	0		
	3	DSPOUT<3>	0		
	4	DSPOUT<4>	0		
	5	DSPOUT<5>	0		
	6	DSPOUT<6>	0		
	7	DSPOUT<7>	0		

Table 14. Read Only Registers

Data Byte	Bit Number	Symbol	Default	Description	
DATA4 (0x2C)	0	DSPOUT<8>	0	DSP Output	Read Area
	1	DSPOUT<9>	0		
	2	DSPOUT<10>	0		
	3	DSPOUT<11>	0		
	4	Not used	0	A read command returns all data bits at 0	
	5	Not used	0		
	6	Not used	0		
	7	Not used	0		
DATA5 (0x2D)	0	AGCVALUE<0>	0	AGC Value	
	1	AGCVALUE<1>	0		
	2	AGCVALUE<2>	0		
	3	AGCVALUE<3>	0		
	4	AGCVALUE<4>	0		
	5	AGCVALUE<5>	0		
	6	AGCVALUE<6>	0		
	7	AGCVALUE<7>	0		
DATA6 (0x2E)	0	MAG<0>	0	Magnitude of magnetic field	
	1	MAG<1>	0		
	2	MAG<2>	0		
	3	MAG<3>	0		
	4	MAG<4>	0		
	5	MAG<5>	0		
	6	MAG<6>	0		
	7	MAG<7>	0		
DATA7 (0x2F)	0	Not used	0	A read command returns all data bits at 0	
	1	Not used	0		
	2	Not used	0		
	3	Not used	0		
	4	Not used	0		
	5	Not used	0		
	6	Not used	0		
	7	Not used	0		

9.6 Special Registers

Table 15. Special Registers

Data Byte	Bit Number	Symbol	Default	Description	
DATA0 (0x41)	0	AS5261KEY<0>	0	AS5261 KEY<15:0>=0101 0001 0110 0010 A write command with data different from AS5261 KEY is not executed A read command returns all data bits at 0	Fuse Register
	1	AS5261KEY<1>	0		
	2	AS5261KEY<2>	0		
	3	AS5261KEY<3>	0		
	4	AS5261KEY<4>	0		
	5	AS5261KEY<5>	0		
	6	AS5261KEY<6>	0		
	7	AS5261KEY<7>	0		
DATA1 (0x42)	0	AS5261KEY<8>	0		
	1	AS5261KEY<9>	0		
	2	AS5261KEY<10>	0		
	3	AS5261KEY<11>	0		
	4	AS5261KEY<12>	0		
	5	AS5261KEY<13>	0		
	6	AS5261KEY<14>	0		
	7	AS5261KEY<15>	0		
DATA0 (0x60)	0	AS5261KEY<0>	0	AS5261 KEY<15:0>=0101 0001 0110 0010 A write command with data different from AS5261 KEY is not executed A read command returns all data bits at 0	Pass2Func Register
	1	AS5261KEY<1>	0		
	2	AS5261KEY<2>	0		
	3	AS5261KEY<3>	0		
	4	AS5261KEY<4>	0		
	5	AS5261KEY<5>	0		
	6	AS5261KEY<6>	0		
	7	AS5261KEY<7>	0		
DATA1 (0x61)	0	AS5261KEY<8>	0		
	1	AS5261KEY<9>	0		
	2	AS5261KEY<10>	0		
	3	AS5261KEY<11>	0		
	4	AS5261KEY<12>	0		
	5	AS5261KEY<13>	0		
	6	AS5261KEY<14>	0		
	7	AS5261KEY<15>	0		

9.7 Programming Procedure

- Pull-up on out pin
- VDD=5V
- Wait 10ms (after the startup time device enters communication mode)
- Write command: Trimming bits are written in the OTP RAM
- Read command: All the trimming bits are read back to check the correctness of the writing procedure.
- Write AS5261KEY in the Fuse register: The OTP RAM content is permanently transferred into the Poly Fuse cells.
- Wait 10 ms (fuse time)
- Write command, R1K_10K<1:0>=(11)b: Poly Fuse cells are downloaded into the RAM memory using a 10K resistance as reference.
- Wait 5 ms (download time)
- Read R1K_10K register, the expected value is 00b
- Write command, R1K_10K<1:0>=(11)b
- Read R1K_10K register, the expected value is (11)b. NB: Step11 and Step12 have to be consecutive.
- Read command: all the fused bits downloaded with 10K resistance are read back.
- Write command, R1K_10K=<1:0>=(10)b: Poly Fuse cells are downloaded into the RAM memory using a 1K resistance as reference.
- Wait 5 ms (download time)
- Read R1K_10K register, the expected value is (00)b
- Write command register, R1K_10K<1:0>=(10)b
- Read R1K_10K register, the expected value is (10)b NB: Step18 and Step19 have to be consecutive.
- Read command: All the fused bits downloaded with 1K resistance are read back.
- Check that read commands at Steps 5, 13 and 19 are matching
- Write AS5261 KEY in the Pass2Func register: Device enters normal mode.

10 Package Drawings and Markings

The device is available in a *MLF-16 package.*

Figure 14. Package Drawings and Dimensions

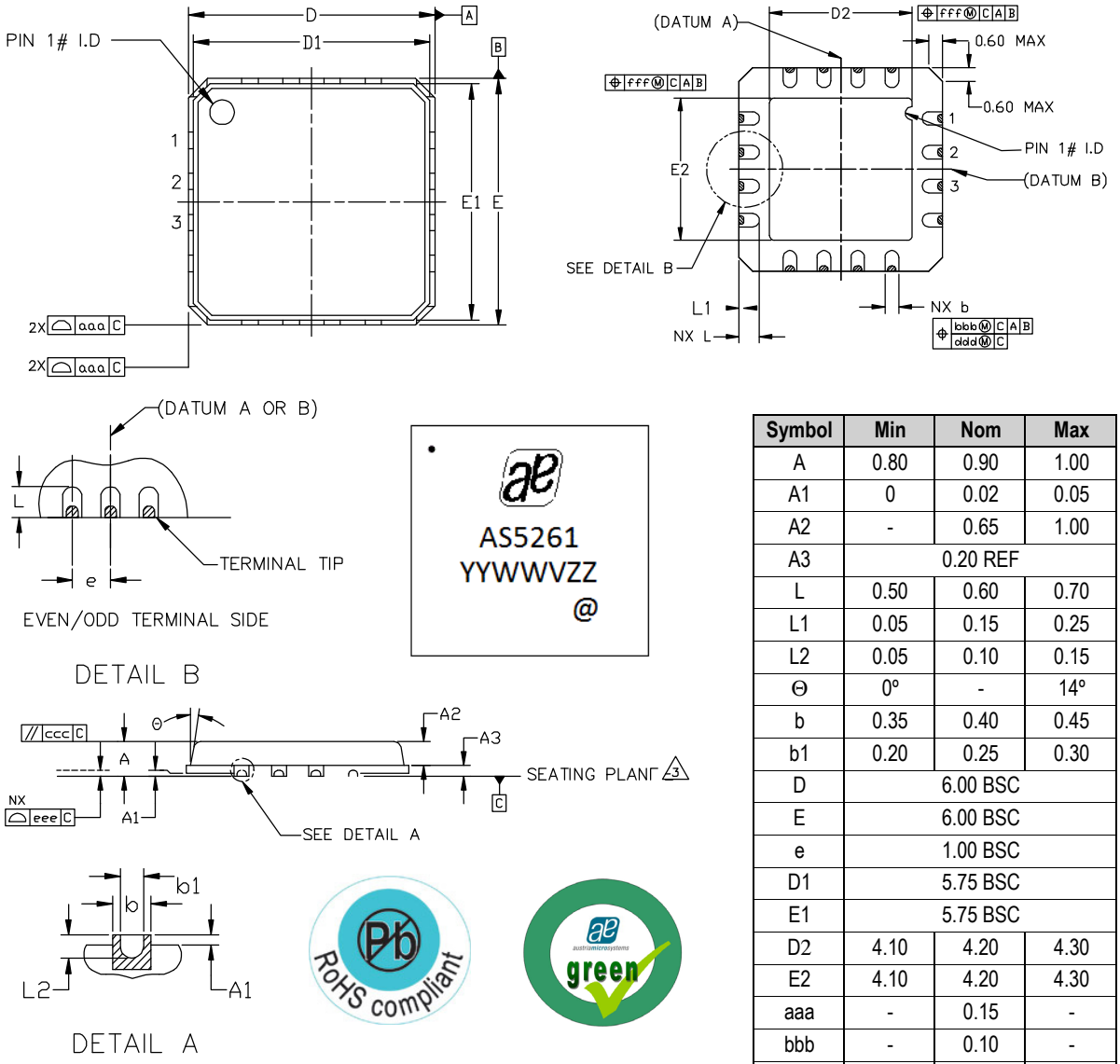

Symbol	Min	Nom	Max
A	0.80	0.90	1.00
A1	0	0.02	0.05
A2	-	0.65	1.00
A3		0.20 REF	
L	0.50	0.60	0.70
L1	0.05	0.15	0.25
L2	0.05	0.10	0.15
Θ	0°	-	14°
b	0.35	0.40	0.45
b1	0.20	0.25	0.30
D		6.00 BSC	
E		6.00 BSC	
e		1.00 BSC	
D1		5.75 BSC	
E1		5.75 BSC	
D2	4.10	4.20	4.30
E2	4.10	4.20	4.30
aaa	-	0.15	-
bbb	-	0.10	-
ccc	-	0.10	-
ddd	-	0.05	-
eee	-	0.08	-
fff	-	0.10	-
N		16	

Notes:

1. Dimensions and tolerancing confirm to *ASME Y14.5M-1994.*
2. All dimensions are in miilimeters. Angles are in degrees.
3. Bilaretal coplanarity zone applies to the exposed pad as well as the terminal.
4. Radius on the terminal is optional.
5. N is the total number of terminals.

Marking: YYWWIZZ.

YY	WW	V	ZZ
Year	Week	Assembly plant identifier	Assembly traceability code

Figure 15. Vertical Cross Section of MLF-16

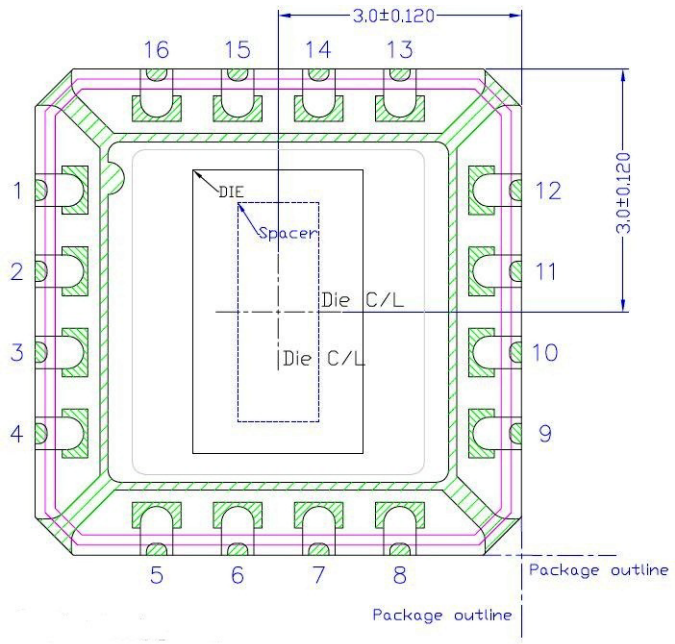

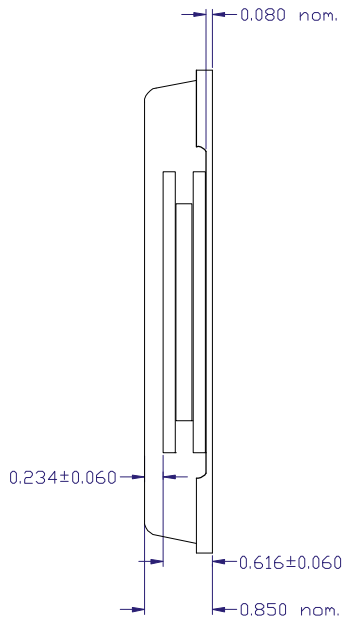

Notes:

1. All dimensions in mm.
2. Die thickness 0.150mm nom.
3. Adhesive thickness 0.011mm.
4. Spacer thickness 0.203mm typ.

Revision History

Revision	Date	Owner	Description
1.0	30 Oct, 2012	mub	Initial revision
1.1	31 Oct, 2012		Updated Figure 3, Table 1, Detailed Description and Added Section 9.1

Note: Typos may not be explicitly mentioned under revision history.

11 Ordering Information

The device is available as the standard products shown in Table 16.

Table 16. Ordering Information

Ordering Code	Description	Delivery Form	Package
AS5261-HMFP, -HMFM	12-bit programmable redundant angle position sensor with PWM outputs	Tape and Reel	MLF 16 6x6

Note: All products are RoHS compliant and ams green.
Buy our products or get free samples online at www.ams.com/ICdirect

Technical Support is available at www.ams.com/Technical-Support

For further information and requests, email us at sales@ams.com
(or) find your local distributor at www.ams.com/distributor

Copyrights

Copyright © 1997-2012, ams AG, Tobelbaderstrasse 30, 8141 Unterpremstaetten, Austria-Europe. Trademarks Registered ®. All rights reserved. The material herein may not be reproduced, adapted, merged, translated, stored, or used without the prior written consent of the copyright owner.

All products and companies mentioned are trademarks or registered trademarks of their respective companies.

Disclaimer

Devices sold by ams AG are covered by the warranty and patent indemnification provisions appearing in its Term of Sale. ams AG makes no warranty, express, statutory, implied, or by description regarding the information set forth herein or regarding the freedom of the described devices from patent infringement. ams AG reserves the right to change specifications and prices at any time and without notice. Therefore, prior to designing this product into a system, it is necessary to check with ams AG for current information. This product is intended for use in normal commercial applications. Applications requiring extended temperature range, unusual environmental requirements, or high reliability applications, such as military, medical life-support or life-sustaining equipment are specifically not recommended without additional processing by ams AG for each application. For shipments of less than 100 parts the manufacturing flow might show deviations from the standard production flow, such as test flow or test location.

The information furnished here by ams AG is believed to be correct and accurate. However, ams AG shall not be liable to recipient or any third party for any damages, including but not limited to personal injury, property damage, loss of profits, loss of use, interruption of business or indirect, special, incidental or consequential damages, of any kind, in connection with or arising out of the furnishing, performance or use of the technical data herein. No obligation or liability to recipient or any third party shall arise or flow out of ams AG rendering of technical or other services.

Contact Information

Headquarters

ams AG
Tobelbaderstrasse 30
A-8141 Unterpremstaetten, Austria

Tel : +43 (0) 3136 500 0
Fax : +43 (0) 3136 525 01

For Sales Offices, Distributors and Representatives, please visit:

http://www.ams.com/contact

Mouser Electronics

Authorized Distributor

Click to View Pricing, Inventory, Delivery & Lifecycle Information:

ams:
AS5261-HMFM