CROUZET

22.5 mm DIN rail mounting TQR1 Part number 88865175

- Multi-function or mono-function
- Multi-range
- Multi-voltage
- Screw or spring terminals
- LED status indicator
- Option of connecting an external power supply to the control input
- 3-wire sensor control option

Part numbers

	Type	Functions	Timing	Output	Nominal rating	Connections	Supply voltage
88 865 175	TQR1	Q	0,1s→100h	1 changeover relay	8 A	Screw terminals	24 V DC / 24 →240 V AC

Specifications

Timing	
Timing ranges (7 ranges)	1 s - 10 s - 1 min - 10 min - 1 h - 10 h - 100 h TK2R1 : 0.6s - 2.5s - 20s - 160 s
Repetition accuracy with constant parameters	± 0.5 % (IEC/EN 1812-1)
Drift Temperature	± 0,05 % / °C
Drift Voltage	± 0.2 % / V
Display accuracy according to IEC/EN 61812-1	± 10 % / 25 °C
Minimum pulse duration typically (relay version)	30 ms
Minimum pulse duration typically (solid state version)	50 ms
Minimum pulse duration typically (relay version under load)	100 ms
Maximum reset time by de-energisation typically (relay version)	100 ms
Maximum reset time by de-energisation typically (solid state version)	350 ms
Immunity from micro power cuts : typical	> 10 ms
Supply	*** TRADUCTION MANQUANTE ***
Multi-voltage power supply	Depending on version
Frequency (Hz)	50 / 60
Operating range	85 to 110 % Un (85 to 120 % Un for 12V AC/DC)
Operating factor	100 %
Max. absorbed power	0,6 W 24 V AC/DC 1,5 W 230 V AC 32 VA 230 V AC
Output specification	
1 or 2 changeover relays, AgNi (cadmium-free)	2000 VA/80 W
Rated power	2000 VA/80 W
Maximum breaking current	8 A AC 8A DC
Minimum breaking current	10 mA / 5 V DC
Voltage breaking capacity	250 V AC/ DC
Electrical life (operations)	10^5 operations 8 A 250 V resistive
Mechanical life (operations)	$5x10^6$
Breakdown voltage acc. to IEC/EN 61812-1	2.5 kV /1 min / 1 mA / 50 Hz
Impulse voltage acc. to IEC/EN 60664-1, IEC/EN 61812-1	5 kV, wave 1.2 / 50 µs
Solid state output	
Rated power	0,7 A AC/DC 20 °C (0,5 A UL)
Derating	5 mA / °C
Maximum admissible current	20 A ≤ 10 ms
Minimum breaking current	10 mA
Leakage current	< 5 mA
Voltage breaking capacity	250 V AC/ DC
Maximum voltage drop at terminals	3 wire 4V - 2 wire 8V
Electrical life (operations)	10^8
Mechanical life (operations)	10^8
Breakdown voltage acc. to IEC/EN 60664-1, IEC/EN 60255-5	2.5 kV to 1 mA / 1 min
Input type	Volt-free contact 3-wire PNP output control option residual voltage : 0.4V whatever the timer power supply

Unless otherwise specified, the characteristics given are applicable to all or part of the product range selected

General characteristics

Conformity to standards	IEC/EN 61812-1 IEC/EN 61000-6-1 IEC/EN 61000-6-2 IEC/EN 61000-6-3 IEC/EN 61000-6-4
Certifications	CE, UL, cUL, CSA, GL
Temperature limits use (°C)	-20 →+60
Temperature limits stored (°C)	-30 →+60
Installation category (acc. to IEC/EN 60664-1)	Voltage surge category
Creepage distance and clearance acc. to IEC/EN 60664-1	4 kV / 3
Protection (IEC/EN 60529)	IP 20 IP 40
Degree of protection acc. to IEC/EN 60529 Front face (except Tk2R1)	IP 50
Vibration resistance acc. to IEC/EN 60068-2-6	f = 10 • 55 Hz A = 0,35 mm
Relative humidity no condensation acc. to IEC/EN 60068-2-30	93 % sans condensation
Electromagnetic compatibility - Immunity to electrostatic discharges acc to IEC/EN 61000-4-2	Level III (Air 8 KV / Contact 6 KV)
Immunity to radiated, radio-frequency, electromagnetic field acc. IEC/EN 61000-4-3	Level III 10V/m (80 M Hz to 1 G Hz)
Immunity to rapid transient bursts acc. to IEC/EN 61000-4-4	Level III (direct 2kV / Capacitive coupling clamp 1 KV)
Immunity to shock waves on power supply acc. to IEC/EN 61000-4-5	Level III (2 KV / common mode 2 KV/residual current mode 1KV)
Immunity to radio frequency in common mode acc. to IEC/EN 61000-4-6	Level III (10V rms : 0.15 M Hz to 80 M Hz)
Immunity to voltage dips and breaks acc. to IEC/EN 61000-4-11	30 %/10 ms 60 %/100 ms > 95 %/5 s
Mains-borne and radiated emissions acc. to EN 55022 (CISPR22), EN55011 (CISPR11)	Class B
Fixing : Symmetrical DIN rail	35 mm
Connection capacity - without ferrule	2 x 2,5 mm^2
Connection capacity - with ferrule	2 x 1,5 mm^2
Spring terminals, 2 terminals per connection point - flexible wire	1,5 mm^2
Spring terminals, 2 terminals per connection point - rigid wire	2,5 mm^2
Housing material	Self-extinguishing
Weight : casing 17,5 mm	60 g
Weight : casing 22,5 mm	90 g
Weight : plug-in casing	80 g

90

Display

State displayed by 2 LEDs
- Flashing green when on
- Relay LED yellow during timing

Green LED operation indicator
Pulsing :
- Timer on, no timing in process

Permanently lit :
- Relay waiting, no timing in process

Dimensions (mm)

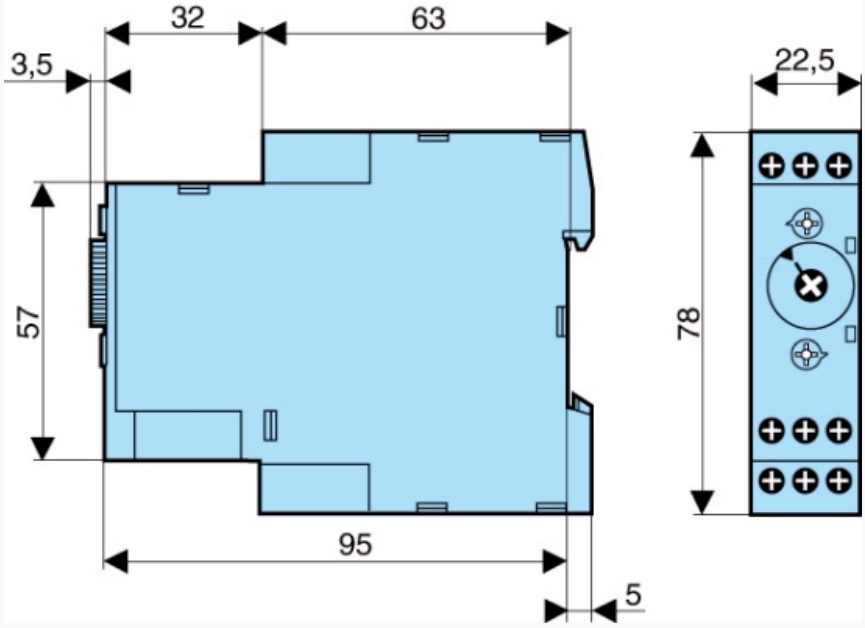

Curves

Function Q - 1 relay output

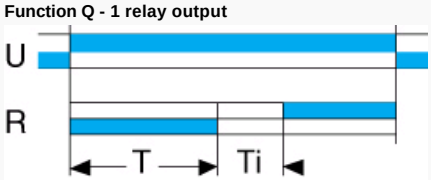

Function Q
Star-delta

Connections

1 changeover relay output

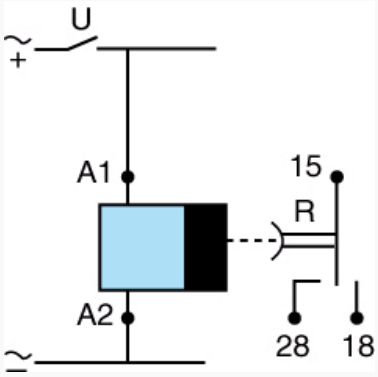

Function
Q

Mouser Electronics

Authorized Distributor

Click to View Pricing, Inventory, Delivery & Lifecycle Information:

Crouzet:
88865175