Number of contacts

96, 64

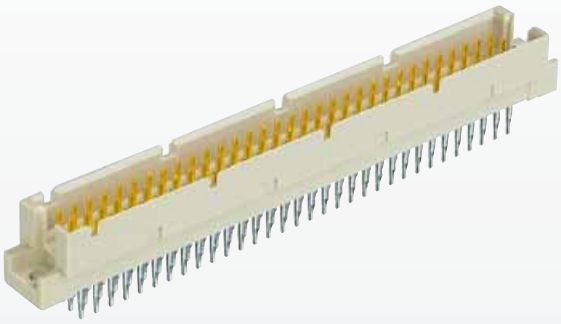

Male connectors

Identification	Number of contacts	Contact arrangement	Part No. 3	Performance levels according to IEC 60 603-2. Explanation chapter 00 2	1
Male connector with press-in terminations 5.0 mm	96	1 2 3 4	performance level 3 or special gold plating on request	performance level 2 or special gold plating on request	09 79 196 2950
	64	1 2 3 4			09 79 164 2950
13 mm	96	1 2 3 4			09 79 196 2961*

Dimensions

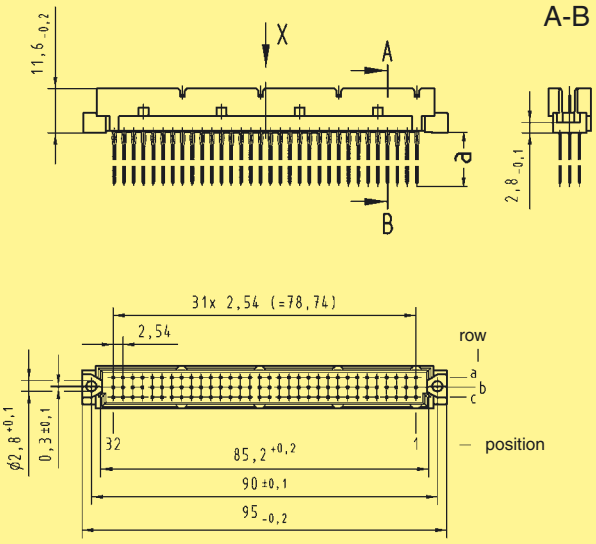

a
5
13

Board drillings

Mounting side

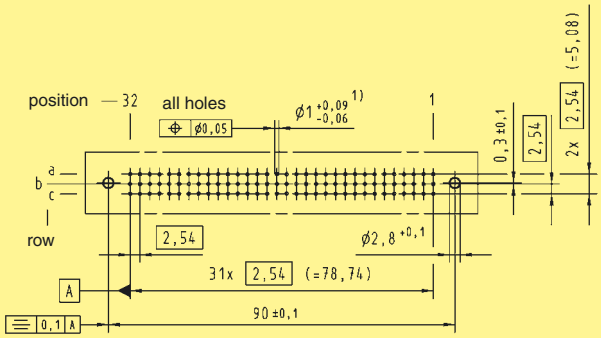

Dimensions in mm

Press-in technology

* Wrap posts for interfacing selectively gold plated (performance level 2)
1) refer to recommended configuration of pcb holes, see page 04.04

Other contact arrangements also with lagging pins on request