Peak Reducing EMI Solution

Features

- Generates an EMI optimized clocking signal at the output.
- Selectable output frequency range.
- Single 1.25% or 2.4% down spread output.
- Integrated loop filter components.
- Operates with a 3.3V supply.
- Low-power CMOS design.
- Available in 8-pin SOIC and 8-pin TSSOP packages.

Product Description

The ASM3P2190A is a versatile spread spectrum frequency modulator designed specifically for a wide range of clock frequencies. The ASM3P2190A reduces electromagnetic interference (EMI) at the clock source, allowing system wide reduction of EMI of down stream clock and data dependent signals. The ASM3P2190A allows significant system cost savings by reducing the number of circuit board layers and shielding that are traditionally required to pass EMI regulations.

The ASM3P2190A modulates the output of a single PLL in order to "spread" the bandwidth of a synthesized clock, thereby decreasing the peak amplitudes of its harmonics. This results in significantly lower system EMI compared to the typical narrow band signal produced by oscillators and most clock generators. Lowering EMI by increasing a signal's bandwidth is called spread spectrum clock generation.

The ASM3P2190A uses the most efficient and optimized modulation profile approved by the FCC and is implemented by using a proprietary all-digital method.

Applications

The ASM3P2190A is targeted towards notebook LCD displays, other displays using an LVDS interface, PC peripheral devices and embedded systems.

Key Specifications

Description	Specification
Supply voltages	V_{DD} = 3.3V ± 5%
Frequency range	6 MHz ≤ 30 MHz
Cycle-to-cycle jitter	325 ps (typical)
Selectable spread percentage	-1.25% or –2.4%
Output duty cycle	40/60% (worst case)
Output rise and fall time	5ns (maximum)

Simplified Block Diagram

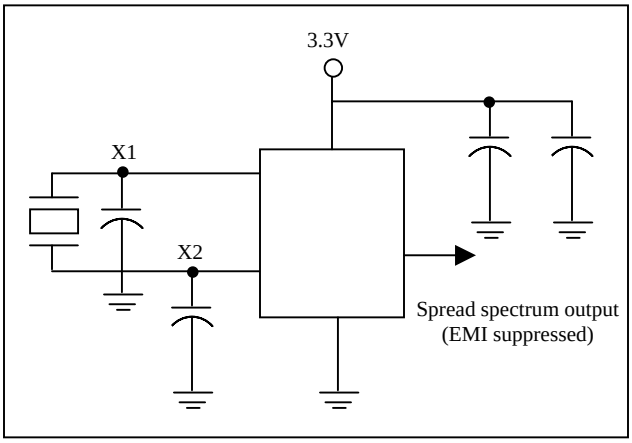

Pin Diagram

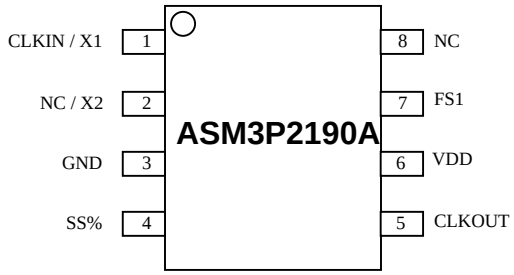

Alliance Semiconductor
2595, Augustine Drive • Santa Clara • CA 95054 • Tel 408 855 4900 • Fax 408 855 4999 • www.alsc.com

Notice: The information in this document is subject to change without notice.

Modulation Width Selection

SS%	Output
0	FIN ≥ FOUT ≥ FIN – 1.25%
1	FIN ≥ FOUT ≥ FIN – 2.4%

Frequency Range Selection

FS1	Modulation Rate
0	6 ≤ FIN ≤10
1	18 ≤ FIN ≤ 30

Pin Description

Pin#	Pin Name	Type	Description
1	CLKIN or X1	I	Crystal connection or external reference frequency input. This pin has dual functions. It can be connected to either an external crystal or an external reference clock.
2	NC OR X2	O	Crystal connection. Connection for an external crystal. If using an external reference, this pin must be left unconnected.
3	GND	G	Ground to entire chip.
4	SS%	I	Modulation width selection. When spread spectrum feature is turned on, this pin is used to select the amount of variation and peak EMI reduction that is desired on the output signal. Internal pull-up resistor.
5	CLKOUT	O	Output modulated frequency. Copy of the un-modulated input clock.
6	VDD	P	Power supply for the entire chip (3.3V).
7	FS1	I	Frequency selection bit 1. This pin selects the frequency range of operation. (*Refer to the Frequency Range Selection Table*). This pin has an internal pull-up resistor.
8	NC	-	No connect.

Notice: The information in this document is subject to change without notice.

Absolute Maximum Ratings

Symbol	Parameter	Rating	Unit
V_{DD}, V_{IN}	Voltage on any pin with respect to GND	-0.5 to + 7.0	V
T_{STG}	Storage temperature	-65 to +125	°C
T_A	Operating temperature	0 to 70	°C
Note: These are stress ratings only and functional operation is not implied. Exposure to absolute maximum ratings for extended periods may affect device reliability.			

DC Electrical Characteristics

Symbol	Parameter	Min	Typ	Max	Unit
V_{IL}	Input low voltage	GND – 0.3	-	0.8	V
V_{IH}	Input high voltage	2.0	-	V_{DD} + 0.3	V
I_{IL}	Input low current (pull-up resistors on inputs SS%, FS1)	-	-	-27	µA
I_{IH}	Input high current	-	-	18	µA
I_{XOL}	X_{OUT} output low current (@ 0.4V, V_{DD} = 3.3V)	-	3	-	mA
I_{XOH}	X_{OUT} output high current (@2.5V, V_{DD} = 3.3V)	-	4	-	mA
V_{OL}	Output low voltage (V_{DD} = 3.3V, I_{OL} = 4mA)	-	-	0.4	V
V_{OH}	Output high voltage (V_{DD} = 3.3V, I_{OH} = 4mA)	2.5	-	-	V
I_{CC}	Dynamic supply current normal mode (3.3V and 10pF loading)	8	21	35	mA
I_{DD}	Static supply current standby mode	-	0.8	-	µA
V_{DD}	Operating voltage	2.8	3.3	3.7	V
t_{ON}	Power up time (first locked clock cycle after power up)	-	0.18	-	mS
Z_{OUT}	Clock output impedance	-	50	-	Ω

AC Electrical Characteristics

Symbol	Parameter	Min	Typ	Max	Unit
CLKIN	Input frequency	6	-	30	MHz
CLKOUT	Output frequency	6	-	30	MHz
t_{LH}*	Output rise time (measured at 0.8V to 2.0V)	1.2	1.3	1.4	ns
t_{HL}*	Output fall time (measured at 2.0V to 0.8V)	0.8	0.9	1.0	ns
t_{JC}	Jitter (cycle to cycle)	-	-	325	ps
t_D	Output duty cycle	45	50	55	%
*t_{LH} and t_{HL} are measured into a capacitive load of 15pF					

Notice: The information in this document is subject to change without notice.

Package Information:

8-Pin SOIC

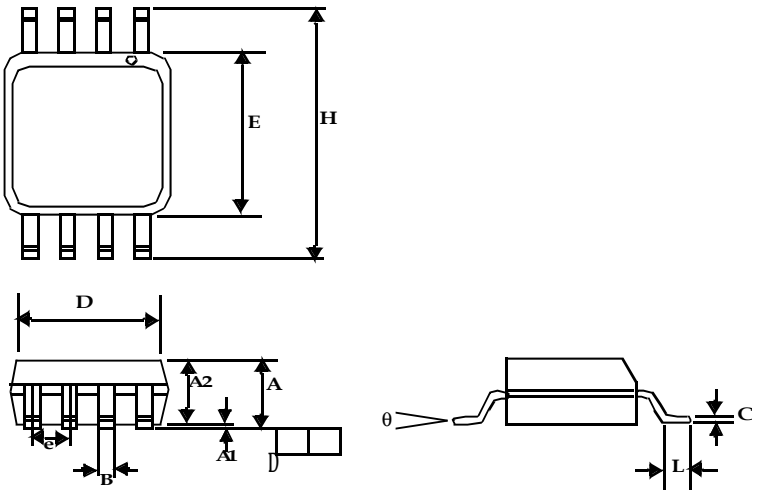

Symbol	Dimensions in inches		Dimensions in millimeters	
	Min	Max	Min	Max
A	0.057	0.071	1.45	1.80
A1	0.004	0.010	0.10	0.25
A2	0.053	0.069	1.35	1.75
B	0.012	0.020	0.31	0.51
C	0.004	0.01	0.10	0.25
D	0.186	0.202	4.72	5.12
E	0.148	0.164	3.75	4.15
e	0.050 BSC		1.27 BSC	
H	0.224	0.248	5.70	6.30
L	0.012	0.028	0.30	0.70
□	0°	8°	0°	8°

Notice: The information in this document is subject to change without notice.

8-Pin TSSOP

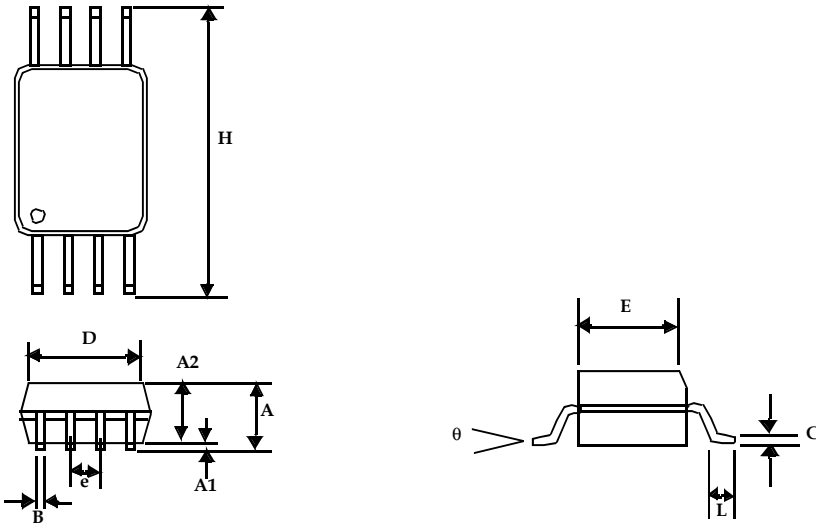

	Dimensions in inches		Dimensions in millimeters	
Symbol	**Min**	**Max**	**Min**	**Max**
A	0.047			1.10
A1	0.002	0.006	0.05	0.15
A2	0.031	0.041	0.80	1.05
B	0.007	0.012	0.19	0.30
C	0.004	0.008	0.09	0.20
D	0.114	0.122	2.90	3.10
E	0.169	0.177	4.30	4.50
e	0.026 BSC		0.65 BSC	
H	0.244	0.260	6.20	6.60
L	0.018	0.030	0.45	0.75
θ	0°	8°	0°	8°

Notice: The information in this document is subject to change without notice.

Ordering Codes

Ordering Number	Marking	Package Type	Quantity per reel	Temperature
ASM3P2190A-08ST	ASM3P2190A	8-pin SOIC, tube		0° C to 70°C
ASM3P2190A-08SR	ASM3P2190A	8-pin SOIC, tape and reel	2500	0° C to 70°C
ASM3P2190A-08TT	ASM3P2190A	8-pin TSSOP, tube		0° C to 70°C
ASM3P2190A-08TR	ASM3P2190A	8-pin TSSOP, tape and reel	2500	0° C to 70°C

Ordering Information

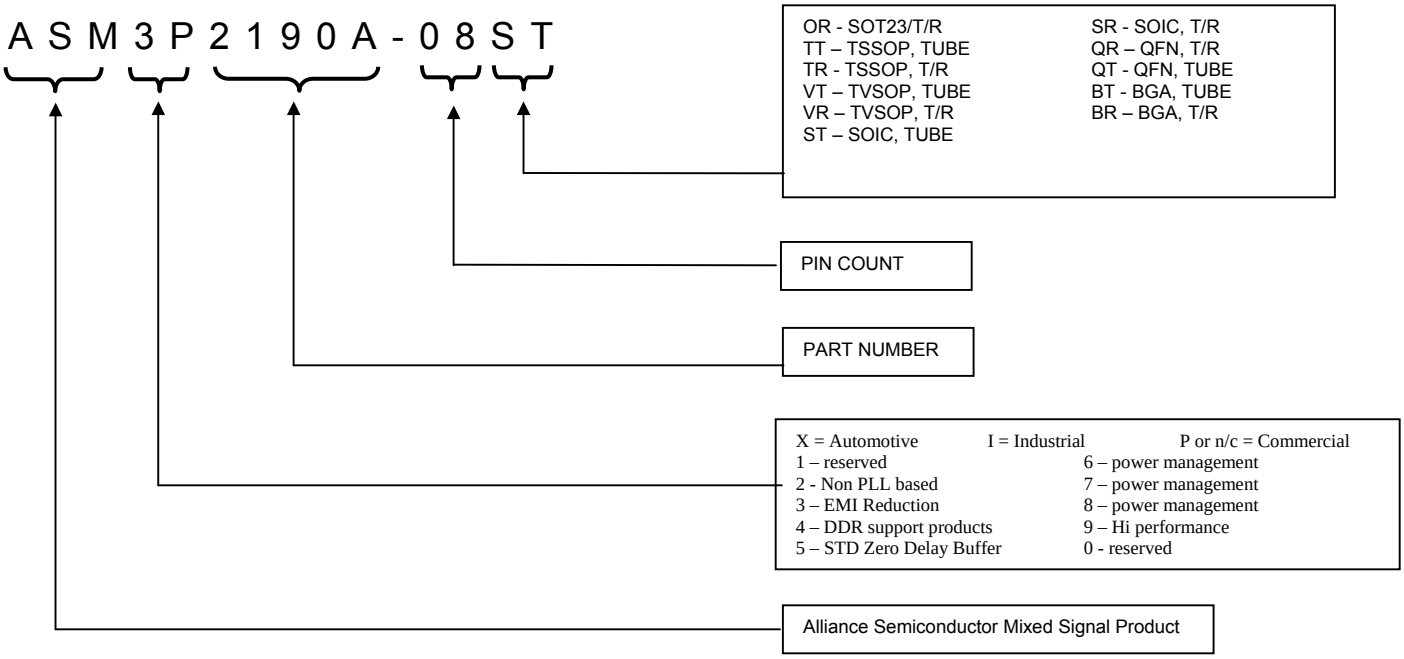

Notice: The information in this document is subject to change without notice.

Alliance Semiconductor Corporation
2595, Augustine Drive,
Santa Clara, CA 95054
Tel# 408-855-4900
Fax: 408-855-4999
www.alsc.com

Copyright © Alliance Semiconductor
All Rights Reserved
Part Number: ASM3P2190A
Document Version: v1.0

© Copyright 2003 Alliance Semiconductor Corporation. All rights reserved. Our three-point logo, our name and Intelliwatt are trademarks or registered trademarks of Alliance. All other brand and product names may be the trademarks of their respective companies. Alliance reserves the right to make changes to this document and its products at any time without notice. Alliance assumes no responsibility for any errors that may appear in this document. The data contained herein represents Alliance's best data and/or estimates at the time of issuance. Alliance reserves the right to change or correct this data at any time, without notice. If the product described herein is under development, significant changes to these specifications are possible. The information in this product data sheet is intended to be general descriptive information for potential customers and users, and is not intended to operate as, or provide, any guarantee or warrantee to any user or customer. Alliance does not assume any responsibility or liability arising out of the application or use of any product described herein, and disclaims any express or implied warranties related to the sale and/or use of Alliance products including liability or warranties related to fitness for a particular purpose, merchantability, or infringement of any intellectual property rights, except as express agreed to in Alliance's Terms and Conditions of Sale (which are available from Alliance). All sales of Alliance products are made exclusively according to Alliance's Terms and Conditions of Sale. The purchase of products from Alliance does not convey a license under any patent rights, copyrights; mask works rights, trademarks, or any other intellectual property rights of Alliance or third parties. Alliance does not authorize its products for use as critical components in life-supporting systems where a malfunction or failure may reasonably be expected to result in significant injury to the user, and the inclusion of Alliance products in such life-supporting systems implies that the manufacturer assumes all risk of such use and agrees to indemnify Alliance against all claims arising from such use.

Notice: The information in this document is subject to change without notice.