SINGLE LAMP LED BULB

Data Sheet

Description:
These single lamp LED Bulbs are specifically designed for flashlight electric equipment, indicator light switch and where a wide view angle. The 9mm round shaped radiation pattern (60°) and high luminous intensity ensure that these devices are excellent for wide field of view outdoor applications where a wide viewing angle and readability in sunlight are essential.

High efficiency LED materials are used in this Bulb.
Every lamp is made with an advanced optical grade epoxy offering superior high shock and high temperature resistance in outdoor applications.

Feature:
- Wide view angle
- High luminous output
- Seven kind color
- Solid-state Vibration resistant
- Saving power
- Long life

Option:
- 6V to 240V AC or DC
- Other industry standard base

A-BRIGHT
A-BRIGHT INDUSTRIAL CO.,LTD.

Part No.: AB-9R1-24V-E12 ***Single Lamp LED Bulb***

PACKAGE DIMENSIONS:

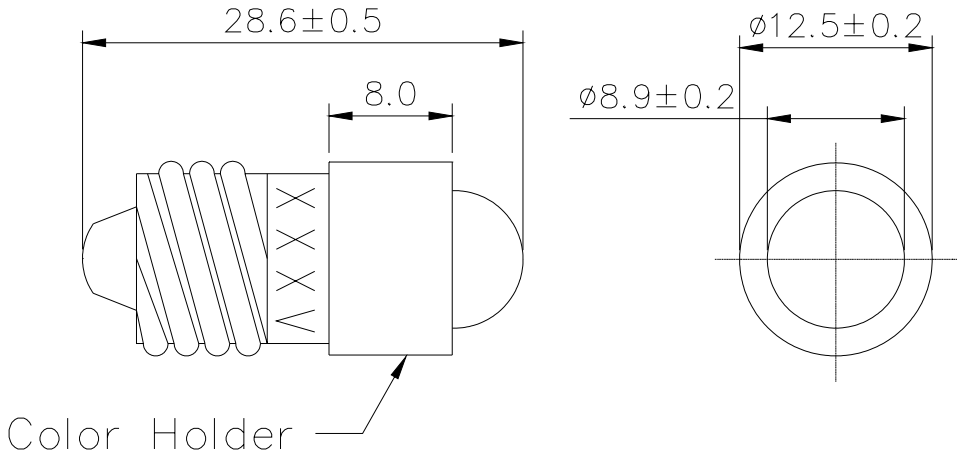

NOTE:

1.All dimensions are in millimeter.

2.Bulb base : E12.

3.All tolerance are ±0.25mm.

A-BRIGHT INDUSTRIAL CO., LTD.

Part No.: AB-9R1-24V-E12 ***Single Lamp LED Bulb***

FEATURE:

- SUPER LUMINOSITY RED LED (AlGaInP).
- WHITE DIFFUSE PACKAGE.
- 9mm ALL RESIN MOLD.
- WIDE VIEWING ANGLE.
- BASE MODEL E12.
- ELECTRIC AC/DC BI-POLAR.

MATERIALS:

- LED LENS: UV RESISTENT EPOXY
- COLOR HOLDER: NYLON 66 UL 94-V2
- BULB BASE:COPPER (CU)

ABSOLUTE MAXIMUM RATING: **Ta = 25 ℃**

- **PEAK OPERATE VOLTAGE..... 28 V**
- **OPERATING TEMPERATURE..... －25 TO ＋85℃**
- **STORAGE TEMPERATURE..... －35 TO ＋100℃**
- **LED BULB LIFE…….. 50000 HOURS**
  (LUMINANCE REDUCES to 50%)

ABSOLUTE OPTICAL CHARACTERISTIC **Ta= 25℃**

PARAMETER		SYMBOL	MIN	TYP	MAX	UNIT
Operate Voltage		V	-----	24	28	V
Luminous Intensity	IF= 15 mA	I v	180	240	-----	mcd
Dominant Wavelength	IF= 15 mA	λ d	-----	630	-----	nm
Spectrum Radiation Bandwidth	IF= 15 mA	Δλ	-----	30	-----	nm
Forward Current	VIN= 24 V DC	IF	-----	15	-----	mA
Viewing Angle		2θ1/2	-----	60	-----	deg