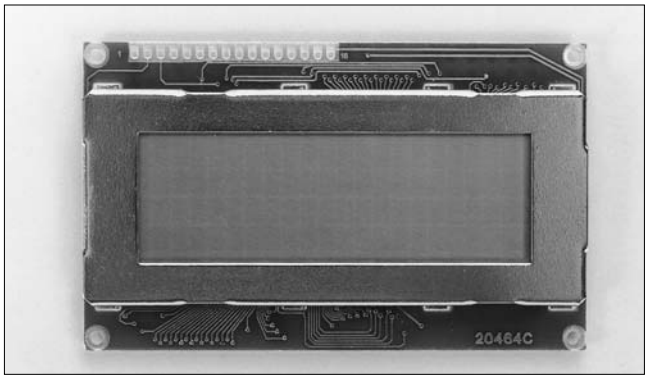

AND721GST/GST-LED

4 Lines x 20 Characters
Intelligent Character Display

The AND721GST/GST-LED devices are compact, LCD modules that have an on-board LCD controller and driver circuit. These devices can display 160 characters (numerals, letters, symbols and Kana letters), as well as eight custom characters.

Features

• RoHS Compliant

- AND721GST: Super Twist Technology
- AND721GST-LED: STN with LED backlight
- Low voltage, +5V single power supply
- Controller on board (HD44780)
- RoHS compliant
- 11 commands for control
- Wide temperature range option (WGST)

Dot Matrix Dimensions

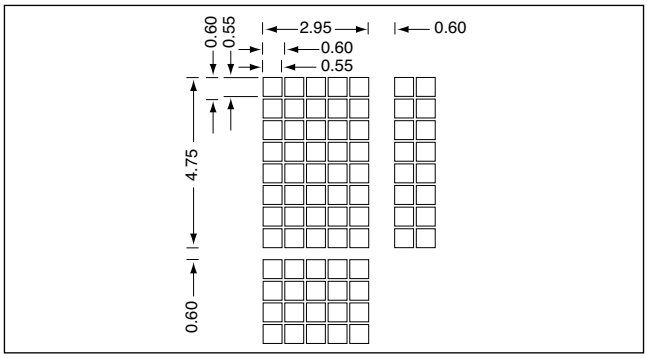

Mechanical Characteristics

Item	Specification	Unit
Outline Dimensions	98 (W) x 60 (H) x 12 (D)	mm
Character Size	2.95 (W) x 4.75 (H)	mm
Viewing Area	76.0 (W) x 25.2 (H)	mm
Dot Size	0.55 (W) x 0.55 (H)	mm
Dot Pitch	0.60 (W) x 0.60 (H)	mm

Absolute Maximum Ratings

Item	Symbol	Rating	Unit
Supply Voltage	V_{DD}	7.0	V
Input Voltage	V_{IN}	$0 \le V_{IN} \le V_{DD}$	V
LED Forward Current	I_F	480	mA

Absolute Maximum Ratings (Continued)

Item	Symbol	Rating	Unit
LED Reverse Voltage	V_R	8	V
LED Power Dissipation	P_D	1900	mW
Operating Temperature	T_{op}	0 to +50	°C
Storage Temperature	T_{stg}	-20 to +60	°C

Electrical Characteristics (TA = 25°C)

Item	Symbol	Min.	Typ.	Max.	Unit
Supply Voltage	V_{DD}	4.75	5.0	5.25	V
	V_{DD}-V_O	3.0	–	6.3	
High Level In Voltage (V_{DD} = 5.0V)	V_{IN}	–	–	V_{DD}	V
Low Level In Voltage (I_{OH} = 0.2 mA)	V_{IH}	0	–	0.6	V
High Level Output Volt. (–I_{OH} = 0.2 mA)	V_{OH}	2.4	–	–	V
Low Level Output Volt. (I_{OL} = 1.2 mA)	V_{OL}	–	–	0.4	V
LED Forward Voltage (I_F = 230 mA)	V_F	3.8	4.1	4.4	V
LED Reverse Current (V_R = 8 V)	I_R	–	–	2.4	mA

Optical Characteristics (TA 5 = 25˚C, ϕ = 0°, θ = 0°)

Item	Symbol	Min.	Typ.	Max.	Unit
Viewing Angle	f	–	50	–	degree
Contrast	K	–	6.0	–	–
Turn On	T_{on}	–	200	400	ms
Turn Off	T_{off}	–	250	400	ms

Product specifications contained herein may be changed without prior notice. It is therefore advisable to contact Purdy Electronics before proceeding with the design of equipment incorporating this product.

Connector Pin Assignment

Pin #	Signal	Function
1	GND	Ground
2	V_{DD}	+5 Power Supply
3	V_O	LCD Drive Voltage
4	RS	"H" Data Input "L" Command Input
5	R/W	Read/Write
6	E	Enable
7	DB0	Data Bus DB0-DB7 are for 8-bit operation DB4-DB7 are for 4-bit operation
8	DB1	
9	DB2	
10	DB3	
11	DB4	
12	DB5	
13	DB6	
14	DB7	
15	LED	LED Anode (+)
16	LED	LED Cathode Ground

Power Supply

The LCD panel is driven by the voltage V_{DD}–V_O, so an adjustable V_O is required for contrast control and temperature compensation.

Temperature Variations

Temperature	V_{DD}–V_O
0°C	5.00
+25°C	4.75
+50°C	4.50

Power Supply Block Diagram

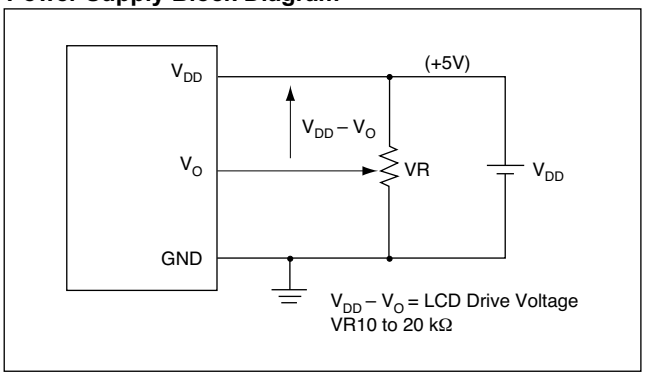

Block Diagram

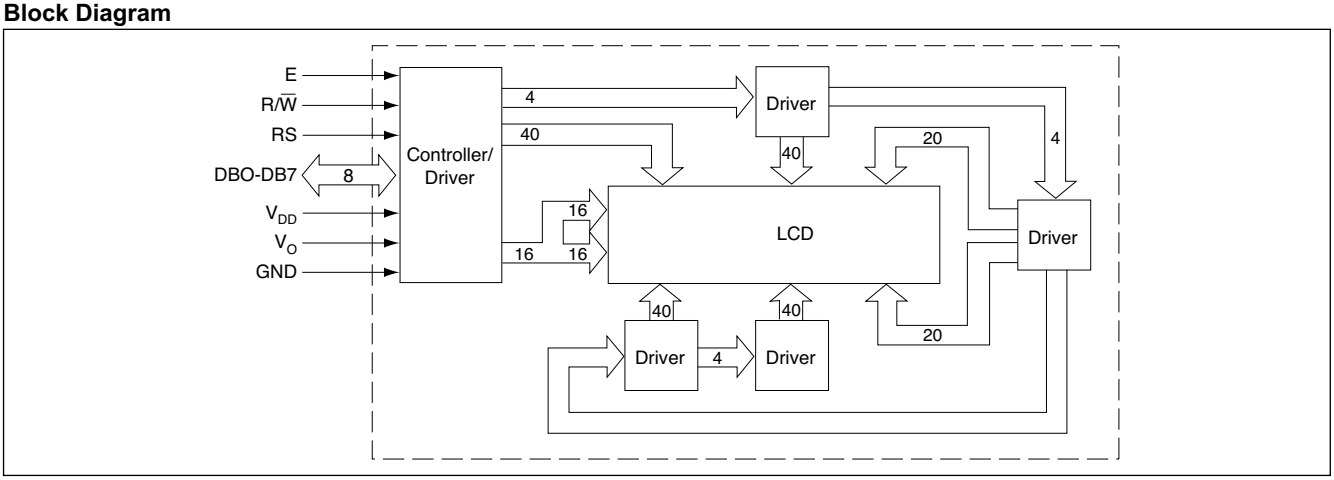
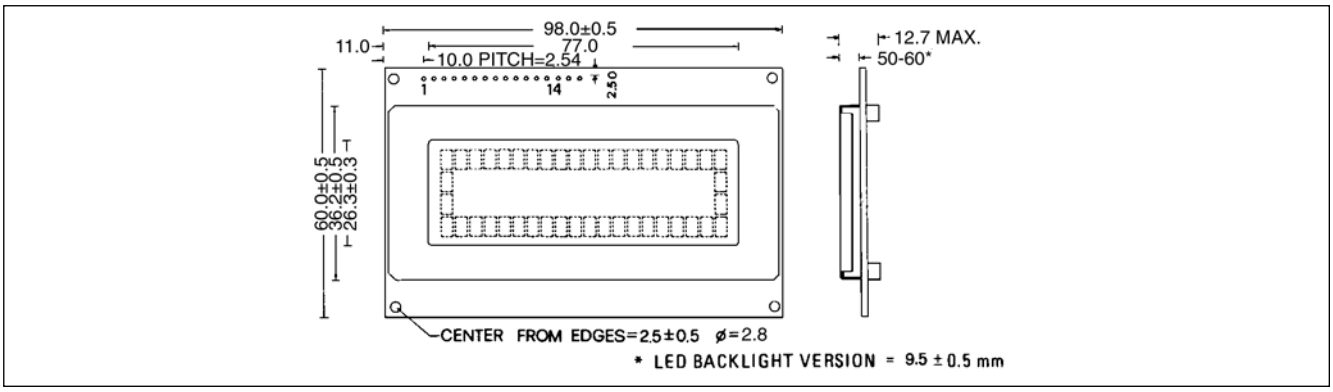
Dimensional Outline