AT1601

Preliminary Product Information

USB High-Side Power Switches with Flag

Features

- Built-In (Typical 110mΩ at 5.0V) N-Channel MOSFET
- Output can be Forced Higher Than Input (Off-State)
- Low Supply Current
  100μA Typical On-State Current
  1μA Typical Off-State Current
- 1A minimum Continuous Load Current
- 1.4A Typical Current Limit
- Open-Drain Fault Flag Output
- Hot Plug-In Application(Soft-Start)
- 1.8V to 5.5V Operating Range
- 1.7V Under-Voltage-Lockout(UVLO)
- Thermal Shutdown Protection
- SOP8 Package

Applications

- High-Side Power Protection Switch
- USB Power Management
- Notebook, Motherboard PCs

General Description

The AT1601 is an integrated high-side power switch optimized for self-powered and bus-powered Universal Serial Bus (USB) applications. With built-in a charge pump circuitry to drive the internal MOSFET switch, the switch's low on-resistance meets USB voltage drop requirements. A flag output is available to indicate fault conditions to the local USB controller.

The AT1601 includes soft-start to limit inrush current during plug-in, 1.4A current limit to limit the output current to a safe level which meet the UL 25VA safety requirements, thermal shutdown to prevent catastrophic switch failure from high-current loads, under voltage lockout (UVLO) to ensure that the device remains off unless there is a valid input voltage present, and an enable input that is compatible with both 3.3V and 5V logic.

System Block

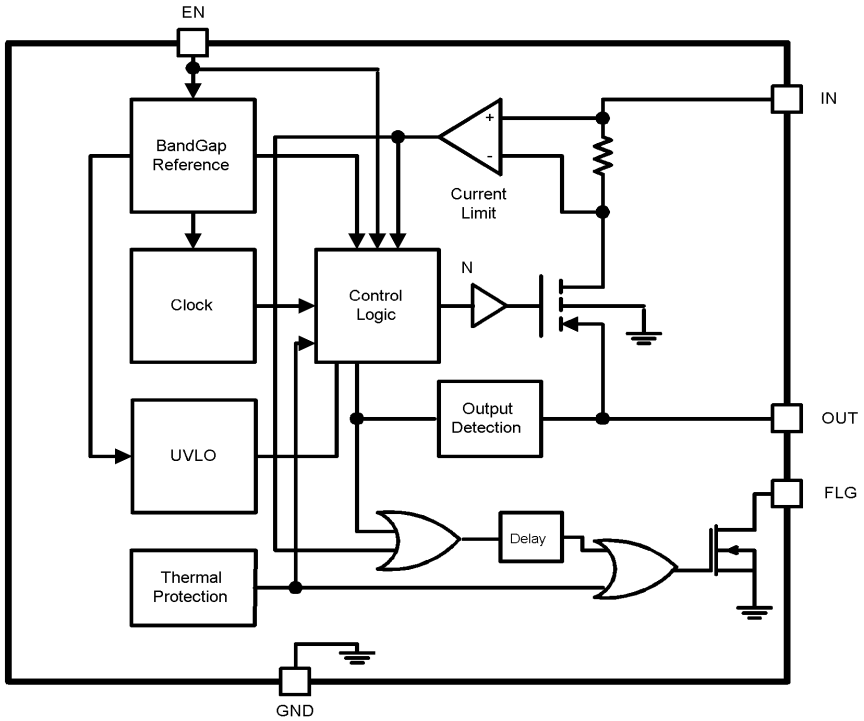

Aimtron reserves the right without notice to change this circuitry and specifications.

2F, No.10, Prosperity RD. II, Science-Based Industrial Park, Hsinchu 300,Taiwan, R.O.C.
Tel: 886-3-563-0878 WWW: http://www.aimtron.com.tw
Fax: 886-3-563-0879 Email: service@aimtron.com.tw

Ordering Information

Part Number	Package	Marking	EN
AT1601A	SOP8	AT1601AS	Active High
AT1601A_GRE	SOP8,Green	AT1601AS,date code with one bottom line	
AT1601B	SOP8	AT1601BS	Active Low
AT1601B_GRE	SOP8,Green	AT1601BS,date code with one bottom line	

Pin Assignment

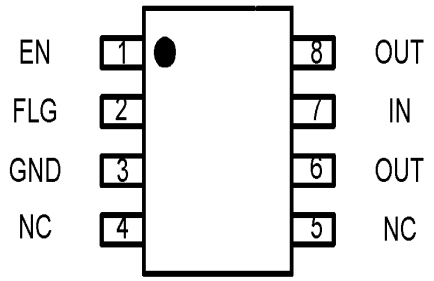

Pin Description

Pin No.	Symbol	I/O	Description
1	EN	I	Enable Input: AT1601A high active, AT1601B low active
2	FLG	O	Open-Drain Fault Flag Output
3	GND	P	Ground
4,5	NC	-	
7	IN	P	Input Power
6,8	OUT	P	Switch Output

Absolute Maximum Ratings

Item	Symbol	Ratings	Units
Storage temperature	T_{STG}	-55～＋150	℃
Operating temperature	T_{OPR}	-30～＋85	℃
IN,OUT,FLG,EN input voltage		-0.3～＋6.5	V
FLG Current	I_{FLG}	50	mA
OUT Current	I_{OUT}	Internal Limited	A
ESD Protection *	(Human Body Mode)	2	KV
Thermal Resistance	θJA	160	°C/W
Lead Temperature(Soldering. 10sec.)		260	°C

***Devices are ESD protected, handling precaution are recommended.**

Recommended Operating Ratings

Item	Symbol	Ratings	Units
Operating temperature	T_{OPR}	-20～＋85	℃
IN input voltage		1.8～5.5	V
EN input voltage		0～5.5	V

Electrical Characteristics

(V_{IN}=5.0V, Ta=+25^{0}C)

Parameter	Symbol	Condition	Values			Unit
			Min.	Typ.	Max.	
Input Supply Current	I_{IN1}	Switch Off, OUT=Open V_{IN}=5.0V	-	1	8	μA
		Switch Off, OUT=Open V_{IN}=3.3V	-	1	5	μA
Input Supply Current	I_{IN2}	Switch On, OUT=Open V_{IN}=5.0V	-	120	160	μA
		Switch On, OUT=Open V_{IN}=3.3V	-	100	120	μA
EN Enable Threshold	V_{OH}	Low to High Transition	-	-	0.5*VCC	V
	V_{OL}	High to Low Transition	0.4*VCC	-	-	V
EN Input Current	I_{EN}	EN=2.5V	-	0.01	1	μA
		EN=1.0V	-	0.01	1	μA
UVLO Threshold	V_{UVLO}	IN rising	1.5	1.7	-	V
UVLO Hysteresis	Δ_{UVLO}	IN Falling	-	0.1	-	V
Switch Resistance	R_{ON}	IN=5V, I_{OUT}=500mA	-	110	140	mΩ
		IN=3.3V, I_{OUT}=500mA	-	130	180	mΩ
Short Circuit Current Limit	I_{Limit}	Enable into Load, R_{LOAD}=1Ω	1.0	1.4	2.0	A
Short Circuit FoldBack Current	I_{SC}	R_{LOAD}=0Ω, measure prior to thermal shutdown	-	1.0	-	A
OUT Leakage Current	$I_{leakage}$ AT1601A	EN=0, R_{LOAD}=0Ω	-	1	10	μA
	$I_{leakage}$ AT1601B	EN=IN, R_{LOAD}=0Ω	-	1	10	μA
OUT Turn-On Delay	t_{On-D}	R_{LOAD}=10Ω	-	200	-	μs

OUT Turn-On Rise Time	t_{On-R}	R_{LOAD}=10Ω, C_{LOAD}=100μF	-	0.3	-	ms
OUT Turn-Off Delay	t_{Off-D}	R_{LOAD}=10Ω	-	5	20	μs
OUT Turn-Off Fall Time	t_{Off-F}	R_{LOAD}=10Ω, C_{LOAD}=100μF	-	0.3	-	ms
FLG Output Resistance	R_{FLG}	IN=5V, I_{FLG}=10mA	-	10	25-	Ω
		IN=3.3V, I_{FLG}=10mA	-	15	40	Ω
FLG Off Current	I_{FLGL}	FLG=IN	-	0.01	1	μA
FLG Delay Time	t_{FLGL}	From fault to FLG assertion	8	12	15	ms

* For AT1601A, off is ≤2.0V and on is ≥2.5V. For AT1601B, off is ≥2.5V and on is ≤2.0V.(IN=5V)

Application Circuit

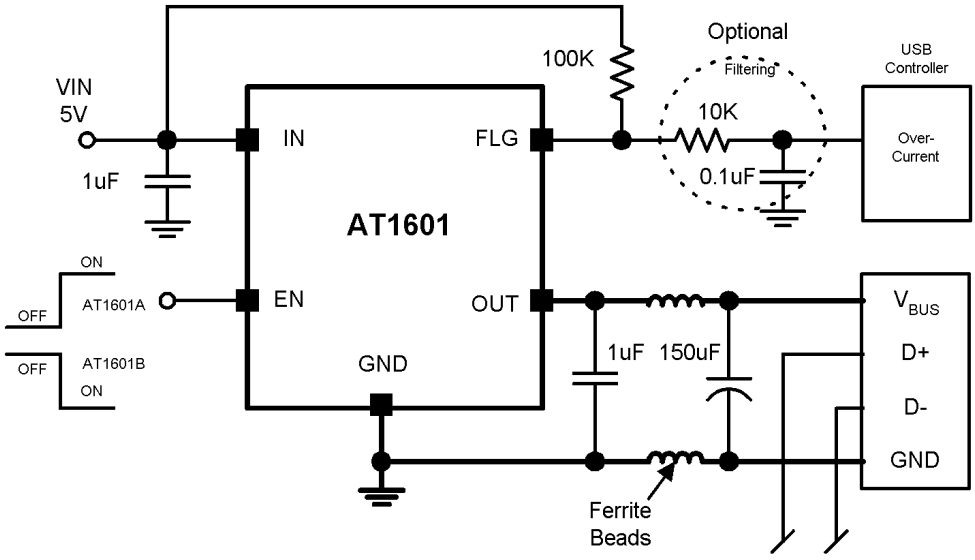

Typical Characteristics(VIN=5V,TA=25℃,AT1601A.)

CH1:EN CH2:FLG CH4:I_{OUT}

FLG Delay waveform

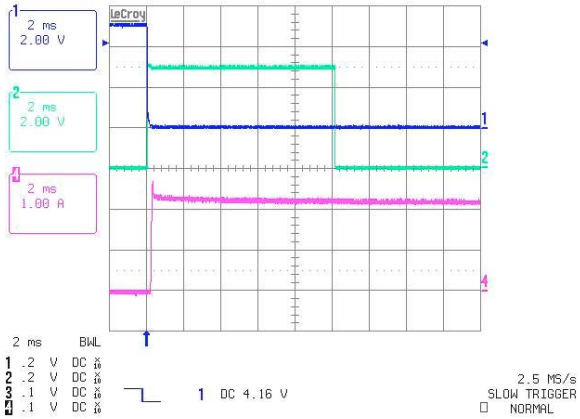

CH1:EN CH2:FLG CH3:V_{OUT}CH4:I_{OUT}

Short Circuit Response

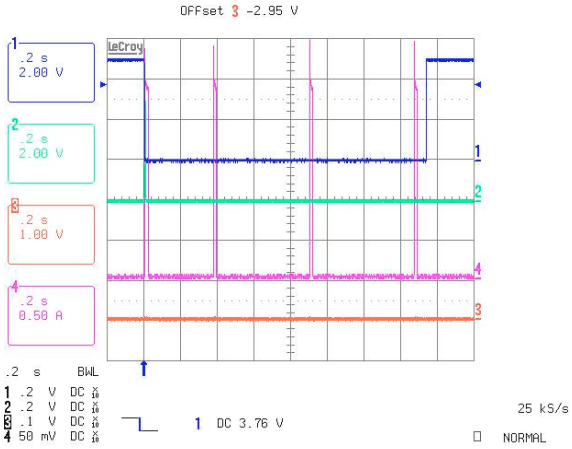

CH1:EN CH2:FLG CH3:V_{OUT}

Turn-on Delay waveform

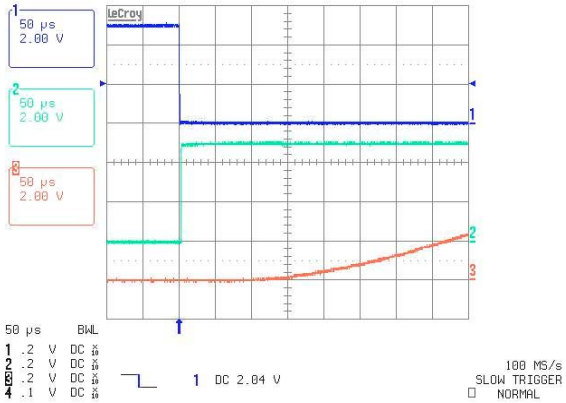

CH1:EN CH2:FLG CH3:V_{OUT}

Turn-off Delay waveform

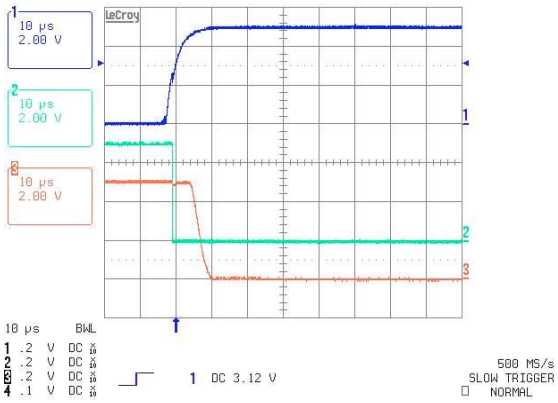

CH1:EN CH2:FLG CH3:V_{out} CH4:V_{IN}

Power UP (UVLO)

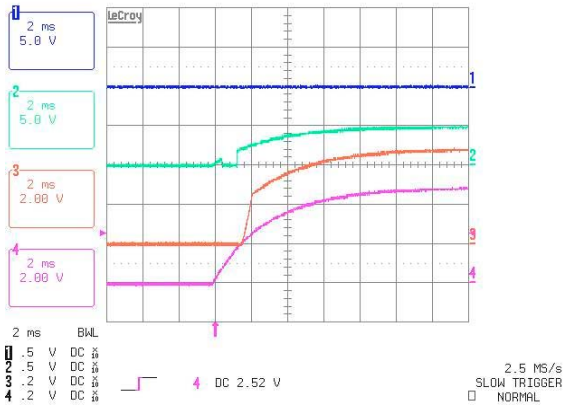

CH1:EN CH2:FLG CH3:V_{out} CH4:V_{IN}

Power Down (UVLO)

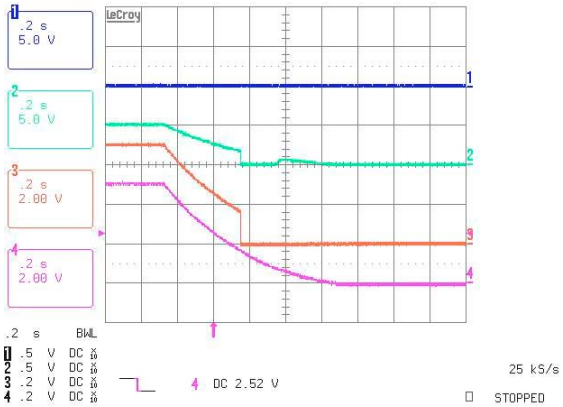

CH1:EN CH2:FLG CH3:V_{out} CH4:V_{IN}

Turn-on CL=47uF

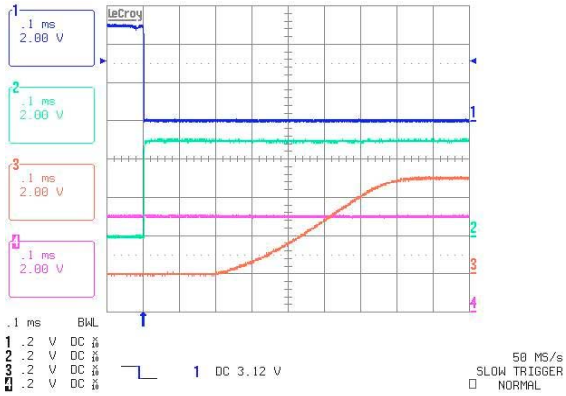

CH1:EN CH2:FLG CH3:V_{out} CH4:V_{IN}

Turn-on CL=220uF

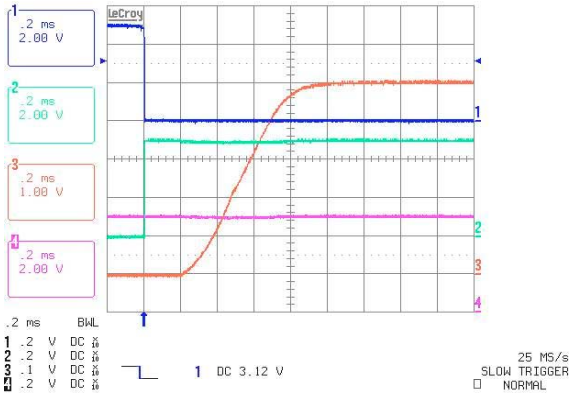

CH1:EN CH2:FLG CH3:V_{out} CH4:V_{IN}

Turn-on CL=1000uF

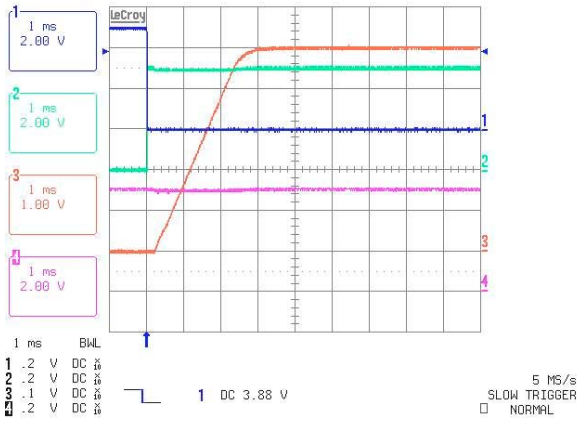

CH1:EN CH2:FLG CH3:V_{out} CH4:V_{IN}

Turn-on CL=6000uF

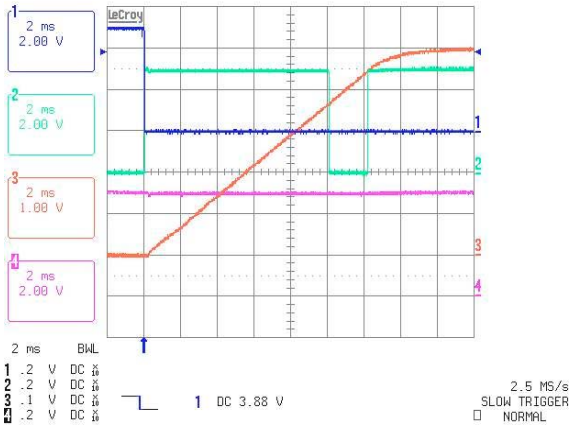

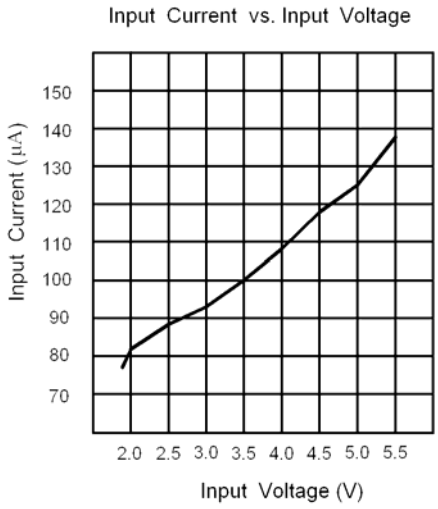
Input Current vs. Input Voltage
Input Current (μA)
150
140
130
120
110
100
90
80
70
2.0 2.5 3.0 3.5 4.0 4.5 5.0 5.5
Input Voltage (V)

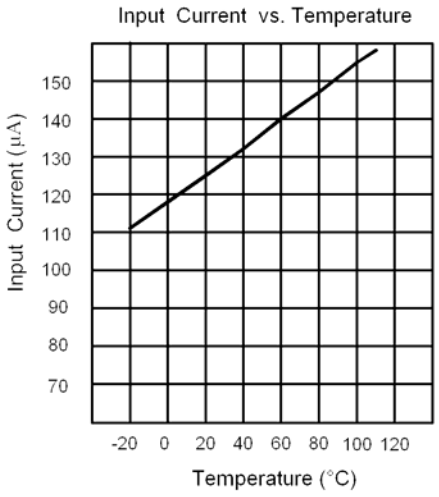
Input Current vs. Temperature
Input Current (μA)
150
140
130
120
110
100
90
80
70
-20 0 20 40 60 80 100 120
Temperature (°C)

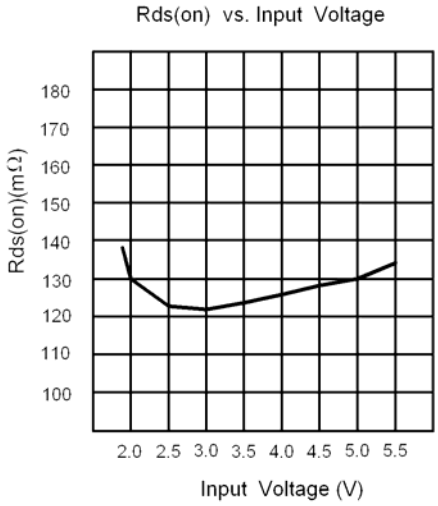
Rds(on) vs. Input Voltage
Rds(on)(mΩ)
180
170
160
150
140
130
120
110
100
2.0 2.5 3.0 3.5 4.0 4.5 5.0 5.5
Input Voltage (V)

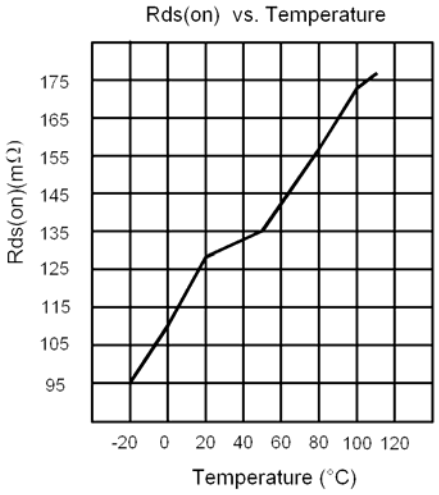
Rds(on) vs. Temperature
Rds(on)(mΩ)
175
165
155
145
135
125
115
105
95
-20 0 20 40 60 80 100 120
Temperature (°C)

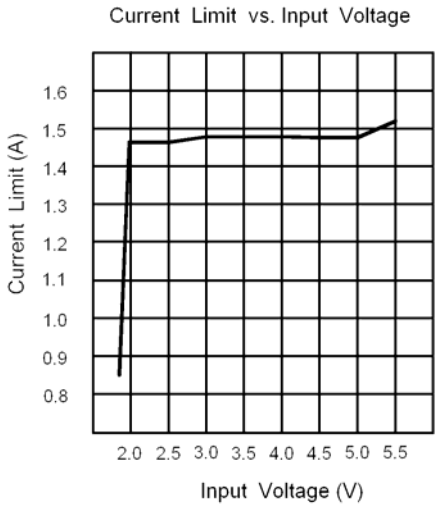
Current Limit vs. Input Voltage
Current Limit (A)
1.6
1.5
1.4
1.3
1.2
1.1
1.0
0.9
0.8
2.0 2.5 3.0 3.5 4.0 4.5 5.0 5.5
Input Voltage (V)

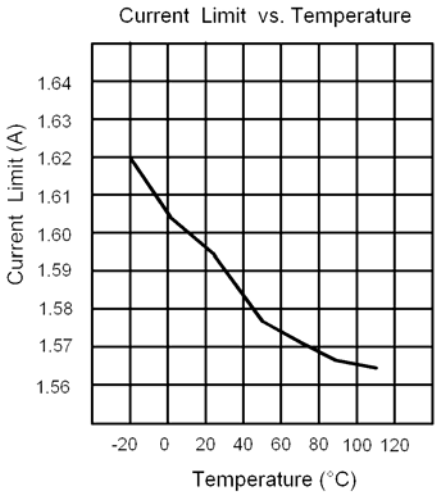
Current Limit vs. Temperature
Current Limit (A)
1.64
1.63
1.62
1.61
1.60
1.59
1.58
1.57
1.56
-20 0 20 40 60 80 100 120
Temperature (°C)

Package Description: SOP8

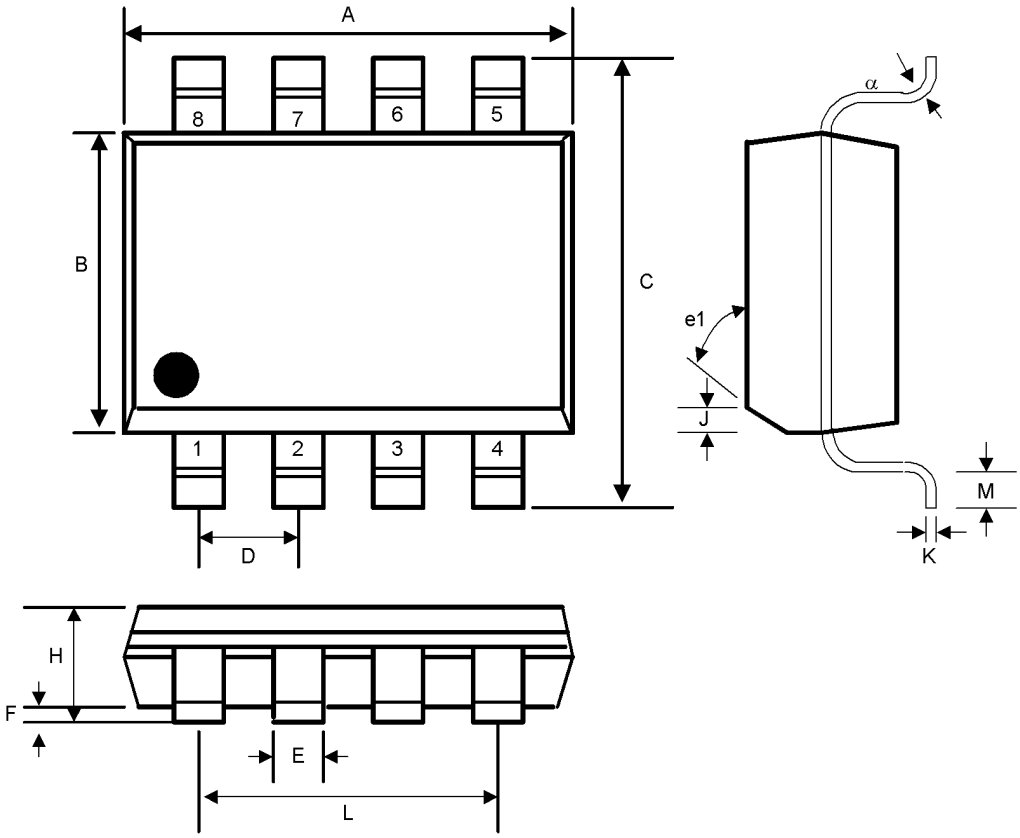

SYMBOL	INCHES		MILLIMETERS		NOTES
	MIN	MAX	MIN	MAX	
A	0.188	0.197	4.80	5.00	-
B	0.149	0.158	3.80	4.00	-
C	0.228	0.244	5.80	6.20	-
D	0.050 BSC		1.27 BSC		-
E	0.013	0.020	0.33	0.51	-
F	0.004	0.010	0.10	0.25	-
H	0.053	0.069	1.35	1.75	-
J	0.011	0.019	0.28	0.48	
K	0.007	0.010	0.19	0.25	-
M	0.016	0.050	0.40	1.27	
L	0.150 REF		3.81 REF		-
e1	45^0		45^0		-
α	0^0	8^0	0^0	8^0	-