AZ DISPLAYS, INC.

COMPLETE LCD SOLUTIONS

SPECIFICATIONS FOR LIQUID CRYSTAL DISPLAY

PART NUMBER: AGM1264P SERIES
DATE: August 17, 2006

AGM1264P SERIES LCD MODULE

GENERAL SPECIFICATION

Interace With Parallel MPU

Driving IC:S1D15605

Display Specification

Display Dot Matrix :128*64

Viewing Angle :6:00 Clock

Display Duty:1/65 Driving bias:1/9 Driving voltage:8.9V

Mechanical Characteristics(Unit:mm)

Extenal Dimension:89.7*49.8*6.0

View Area:66.8*35.5

Dots Size:0.48*0.48

Dots Pitch:0.50*0.50

Absolute Maximun Ratings

Parameter		Symbol	Conditions	Unit
Power Supply Voltage		V_{DD}	–0.3 to +7.0	V
Power supply voltage (2) (V_{DD} standard)	With Triple step-up With Quad step-up	V_{SS2}	–7.0 to +0.3 –6.0 to +0.3 –4.5 to +0.3	V
Power supply voltage (3) (V_{DD} standard)		V_5, V_{OUT}	–18.0 to +0.3	V
Power supply voltage (4) (V_{DD} standard)		V_1, V_2, V_3, V_4	V_5 to +0.3	V
Input voltage		V_{IN}	–0.3 to V_{DD} + 0.3	V
Output voltage		V_O	–0.3 to V_{DD} + 0.3	V
Operating temperature		T_{OPR}	–40 to +85	°C
Storage temperature	TCP Bare chip	T_{STR}	–55 to +100 –55 to +125	°C

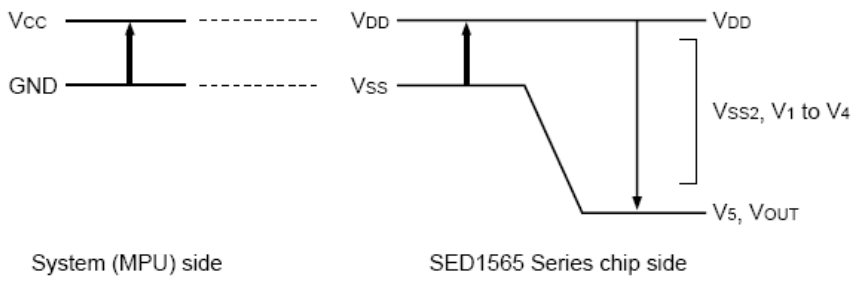

Notes and Cautions

1. The V_{SS2}, V_1 to V_5 and V_{OUT} are relative to the V_{DD} = 0V reference.
2. Insure that the voltage levels of V_1, V_2, V_3, and V_4 are always such that $V_{DD} \geq V_1 \geq V_2 \geq V_3 \geq V_4 \geq V_5$.
3. Permanent damage to the LSI may result if the LSI is used outside of the absolute maximum ratings. Moreover, it is recommended that in normal operation the chip be used at the electrical characteristic conditions, and use of the LSI outside of these conditions may not only result in malfunctions of the LSI, but may have a negative impact on the LSI reliability as well.

Electrical Characteristics

Item	Symbol	Condition	Standard Value			Unit
			Min	Type	Max	
Supply Voltage For logic	Vdd-Vss	-	1.8	-	5.5	V
Supply Current For logic	Idd	-	-	-	1000	uA
Driving Current For LCD	Iee		-	-	80	uA
Driving Voltage For LCD	V0-Vss		-	-	-	V
Input Voltage H level	Vih		0.7Vdd	-	Vdd	V
Input Voltage L level	Vil		Vss	-	0.3Vdd	V

4.1 OPTICAL CHARACTERISTICS (Ta=25°C, Vdd= 5.0V±0.25V, STN LC fluid)

Item	Symbol	Condition	Min	Typ	Max	Unit
Viewing angle (horizontal)	θ	Cr ≥ 2.0	-60	-	35	deg
Viewing angle (vertical)	ϕ	Cr ≥ 2.0	-40	-	40	deg
Contrast Ratio	Cr	ϕ=0°, θ=0°	-	6	-	
Response time (rise)	Tr	ϕ=0°, θ=0°	-	150	250	ms
Response time (fall)	Tf	ϕ=0°, θ=0°	-	150	250	ms

5.0 BLOCK DIAGRAM

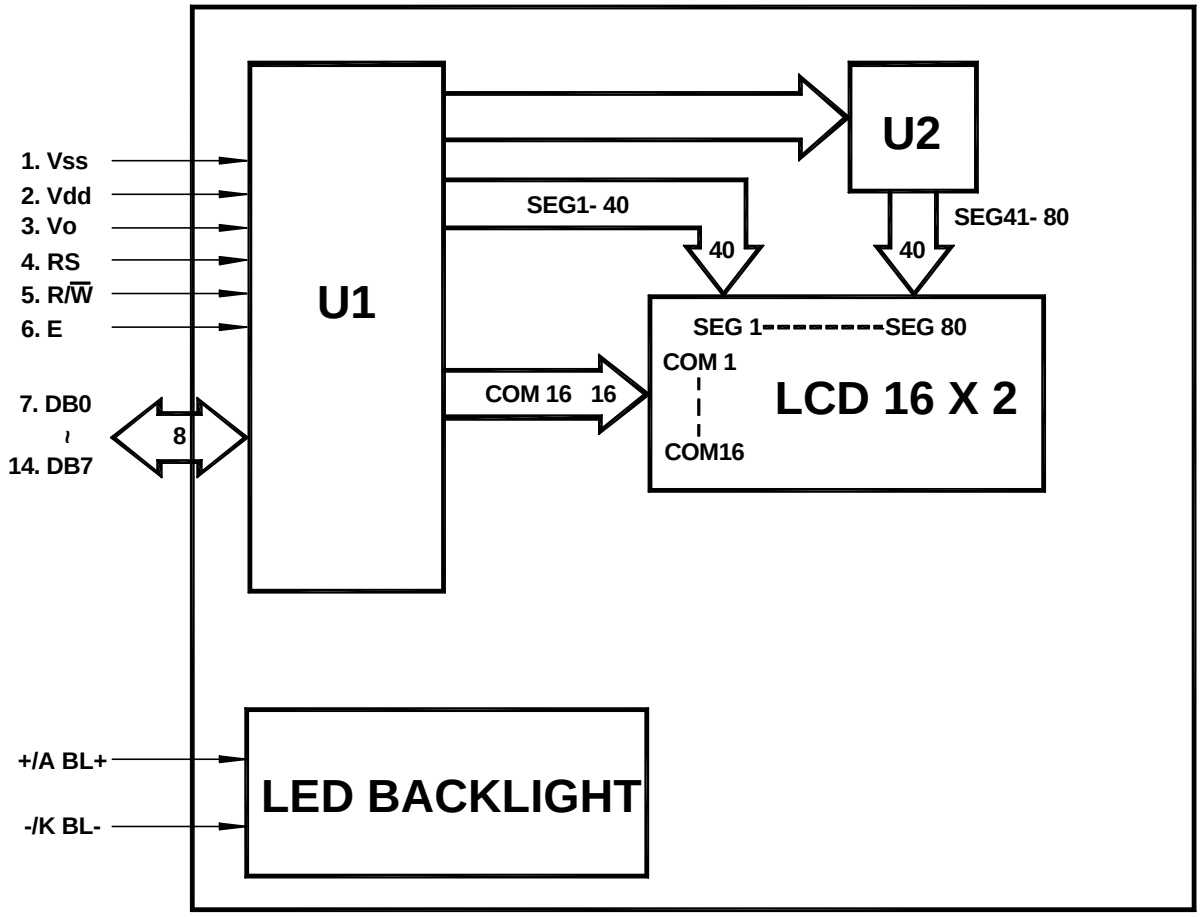

TIMING CHARACTERISTICS

System Bus Read/Write Characteristics 1 (For the 8080 Series MPU)

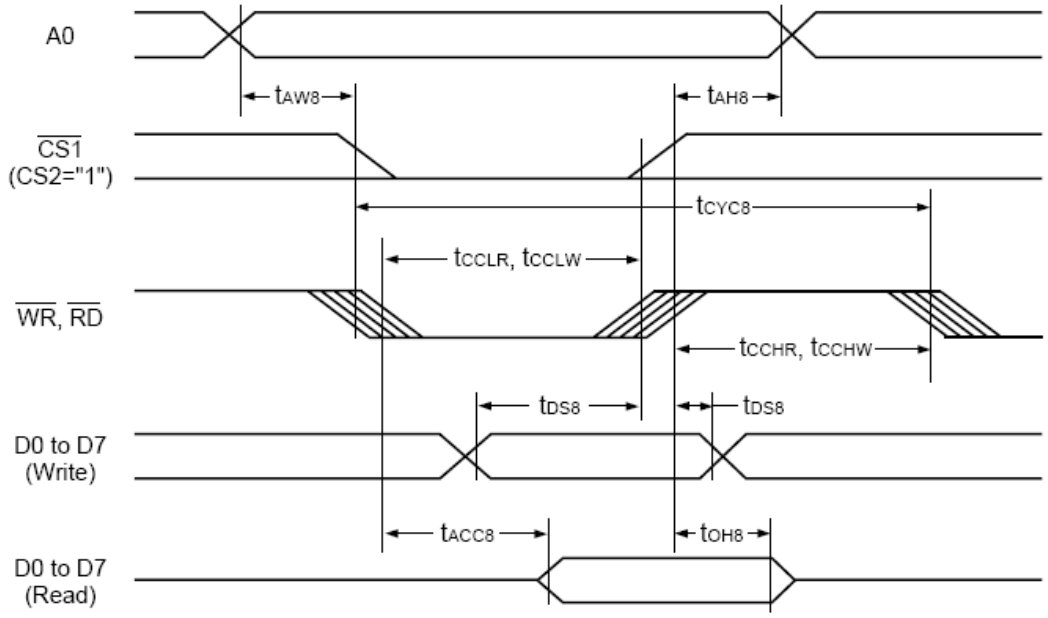

(V_{DD} = 4.5 V to 5.5 V, Ta = –40 to 85°C)

Item	Signal	Symbol	Condition	Rating		Units
				Min	Max	
Address hold time Address setup time	A0	t_{AH8} t_{AW8}		0 0	— —	ns ns
System cycle time	A0	t_{CYC8}		166	—	ns
Control L pulse width ($\overline{WR}$) Control L pulse width ($\overline{RD}$) Control H pulse width ($\overline{WR}$) Control H pulse width ($\overline{RD}$)	$\overline{WR}$ $\overline{RD}$ $\overline{WR}$ $\overline{RD}$	t_{CCLW} t_{CCLR} t_{CCHW} t_{CCHR}		30 70 30 30	— — — —	ns ns ns ns
Data setup time Address hold time	D0 to D7	t_{DS8} t_{DH8}		30 10	— —	ns ns
$\overline{RD}$ access time Output disable time		t_{ACC8} t_{OH8}	C_L = 100 pF	— 5	70 50	ns ns

(V_{DD} = 2.7 V to 4.5 V, Ta = –40 to 85°C)

Item	Signal	Symbol	Condition	Rating		Units
				Min	Max	
Address hold time Address setup time	A0	t_{AH8} t_{AW8}		0 0	— —	ns ns
System cycle time	A0	t_{CYC8}		300	—	ns
Control L pulse width ($\overline{WR}$) Control L pulse width ($\overline{RD}$) Control H pulse width ($\overline{WR}$) Control H pulse width ($\overline{RD}$)	$\overline{WR}$ $\overline{RD}$ $\overline{WR}$ $\overline{RD}$	t_{CCLW} t_{CCLR} t_{CCHW} t_{CCHR}		60 120 60 60	— — — —	ns ns ns ns
Data setup time Address hold time	D0 to D7	t_{DS8} t_{DH8}		40 15	— —	ns ns
$\overline{RD}$ access time Output disable time		t_{ACC8} t_{OH8}	C_L = 100 pF	— 10	140 100	ns ns

(VDD = 1.8 V to 2.7 V, Ta = –40 to 85°C)

Item	Signal	Symbol	Condition	Rating		Units
				Min	Max	
Address hold time	A0	t_{AH8}		0	—	ns
Address setup time		t_{AW8}		0	—	ns
System cycle time	A0	t_{CYC8}		1000	—	ns
Control L pulse width ($\overline{WR}$)	$\overline{WR}$	t_{CCLW}		120	—	ns
Control L pulse width ($\overline{RD}$)	$\overline{RD}$	t_{CCLR}		240	—	ns
Control H pulse width ($\overline{WR}$)	$\overline{WR}$	t_{CCHW}		120	—	ns
Control H pulse width ($\overline{RD}$)	$\overline{RD}$	t_{CCHR}		120	—	ns
Data setup time	D0 to D7	t_{DS8}		80	—	ns
Address hold time		t_{DH8}		30	—	ns
$\overline{RD}$ access time		t_{ACC8}	C_L = 100 pF	—	280	ns
Output disable time		t_{OH8}		10	200	ns

*1 The input signal rise time and fall time (t_r, t_f) is specified at 15 ns or less. When the system cycle time is extremely fast, ($t_r + t_f$) ≤ ($t_{CYC8} – t_{CCLW} – t_{CCHW}$) for ($t_r + t_f$) ≤ ($t_{CYC8} – t_{CCLR} – t_{CCHR}$) are specified.
*2 All timing is specified using 20% and 80% of VDD as the reference.
*3 t_{CCLW} and t_{CCLR} are specified as the overlap between $\overline{CS1}$ being "L" (CS2 = "H") and $\overline{WR}$ and $\overline{RD}$ being at the "L" level.

System Bus Read/Write Characteristics 2 (6800 Series MPU)

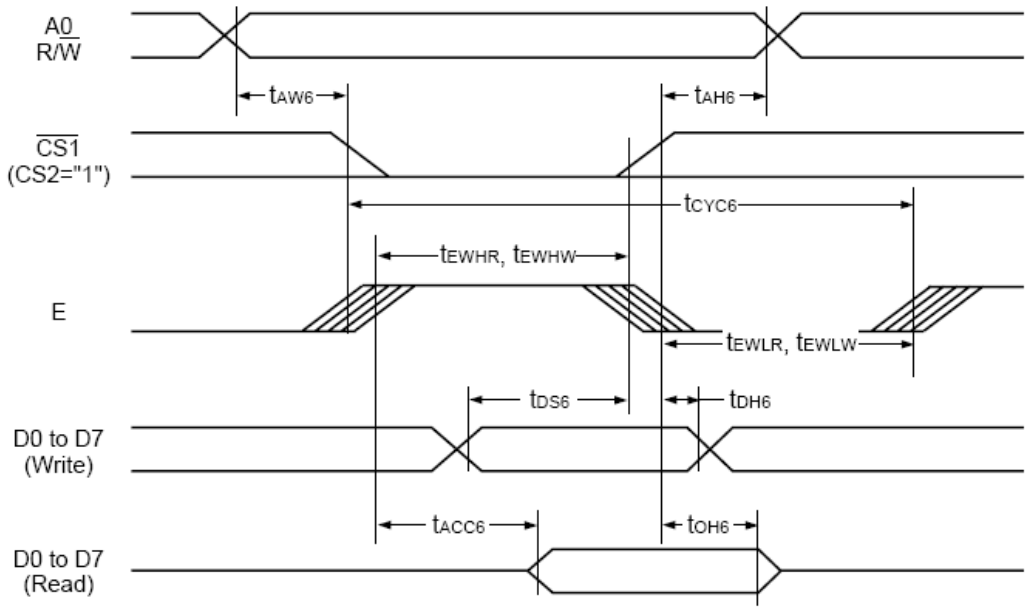

9.0 MECHANICAL DIAGRAM

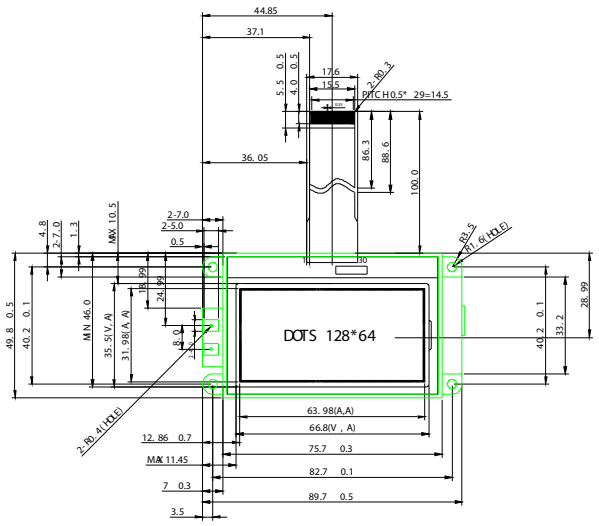

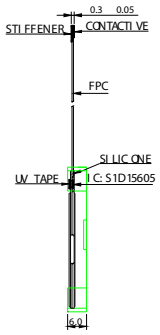

PIN CONNECTIONS:

PIN	SIGNAL	PIN	SIGNAL
1	/CS1	16	VOUT
2	/RES	17	CAP3-
3	A0	18	CAP1+
4	/WR	19	CAP1-
5	/RD	20	CAP2-
6	D0	21	CAP2+
7	D1	22	V1
8	D2	23	V2
9	D3	24	V3
10	D4	25	V4
11	D5	26	V5
12	D6	27	VR
13	D7	28	C86
14	VDD	29	P/S
15	GND	30	IRS

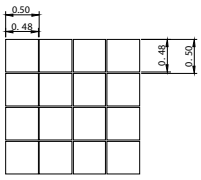

PIXEL DETAIL(SCALE:15:1)

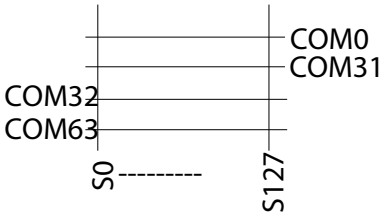

LCD LAYOUT

NOTE:

1. VIEWING ANGLE: 6:00 O'CLOCK
2. DISPLAY MODE:AS IS SHOWN IN TABLE1
3. DRIVING VOLTAGE:8.9V,DUTY:1/65,BIAS:1/9,FREQUENCY:64Hz
4. OPERATING TEMP.:-20° C TO 70° C
5. STORAGE TEMP.:-30° C To 85° C
6. CONNECTOR:FPC TYPE

VER.	MODIFY CONTENTS	DATE	DESIGN
6			
5			
4			
3			
2			
1			

AZ Displays, Inc.

PART NO.

DESIGN BY: CSL 08/11-2005

CHECKED BY:

(V_{DD} = 4.5 V to 5.5 V, Ta = –40 to 85°C)

Item		Signal	Symbol	Condition	Rating		Units
					Min	Max	
Address hold time Address setup time		A0	t_{AH6} t_{AW6}		0 0	— —	ns ns
System cycle time		A0	t_{CYC6}		166	—	ns
Data setup time Data hold time		D0 to D7	t_{DS6} t_{DH6}		30 10	— —	ns ns
Access time Output disable time			t_{ACC6} t_{OH6}	C_L = 100 pF	— 10	70 50	ns ns
Enable H pulse time	Read Write	E	t_{EWHR} t_{EWHW}		70 30	— —	ns ns
Enable L pulse time	Read Write	E	t_{EWLR} t_{EWLW}		30 30	— —	ns ns

(V_{DD} = 2.7 V to 4.5 V, Ta = –40 to 85°C)

Item		Signal	Symbol	Condition	Rating		Units
					Min	Max	
Address hold time Address setup time		A0	t_{AH6} t_{AW6}		0 0	— —	ns ns
System cycle time		A0	t_{CYC6}		300	—	ns
Data setup time Data hold time		D0 to D7	t_{DS6} t_{DH6}		40 15	— —	ns ns
Access time Output disable time			t_{ACC6} t_{OH6}	C_L = 100 pF	— 10	140 100	ns ns
Enable H pulse time	Read Write	E	t_{EWHR} t_{EWHW}		120 60	— —	ns ns
Enable L pulse time	Read Write	E	t_{EWLR} t_{EWLW}		60 60	— —	ns ns

(V_{DD} = 1.8 V to 2.7 V, Ta = –40 to 85°C)

Item		Signal	Symbol	Condition	Rating		Units
					Min	Max	
Address hold time Address setup time		A0	t_{AH6} t_{AW6}		0 0	— —	ns ns
System cycle time		A0	t_{CYC6}		1000	—	ns
Data setup time Data hold time		D0 to D7	t_{DS6} t_{DH6}		80 30	— —	ns ns
Access time Output disable time			t_{ACC6} t_{OH6}	C_L = 100 pF	— 10	280 200	ns ns
Enable H pulse time	Read Write	E	t_{EWHR} t_{EWHW}		240 120	— —	ns ns
Enable L pulse time	Read Write	E	t_{EWLR} t_{EWLW}		120 120	— —	ns ns

*1 The input signal rise time and fall time (t_r, t_f) is specified at 15 ns or less. When the system cycle time is extremely fast, ($t_r + t_f$) ≤ ($t_{CYC6} – t_{EWLW} – t_{EWHW}$) for ($t_r + t_f$) ≤ ($t_{CYC6} – t_{EWLR} – t_{EWHR}$) are specified.
*2 All timing is specified using 20% and 80% of V_{DD} as the reference.
*3 t_{EWLW} and t_{EWLR} are specified as the overlap between $\overline{CS1}$ being "L" (CS2 = "H") and E.

IC Specification

See The Reference of EPSON Data Book----S1D15605

Instruction Table

	Command	Command Code											Function
		A0	$\overline{RD}$	$\overline{WR}$	D7	D6	D5	D4	D3	D2	D1	D0	
(1)	Display ON/OFF	0	1	0	1	0	1	0	1	1	1	0 1	LCD display ON/OFF 0: OFF, 1: ON
(2)	Display start line set	0	1	0	0	1	Display start address						Sets the display RAM display start line address
(3)	Page address set	0	1	0	1	0	1	1	Page address				Sets the display RAM page address
(4)	Column address set upper bit	0	1	0	0	0	0	1	Most significant column address				Sets the most significant 4 bits of the display RAM column address.
	Column address set lower bit	0	1	0	0	0	0	0	Least significant column address				Sets the least significant 4 bits of the display RAM column address.
(5)	Status read	0	0	1	Status				0	0	0	0	Reads the status data
(6)	Display data write	1	1	0	Write data								Writes to the display RAM
(7)	Display data read	1	0	1	Read data								Reads from the display RAM
(8)	ADC select	0	1	0	1	0	1	0	0	0	0	0 1	Sets the display RAM address SEG output correspondence 0: normal, 1: reverse
(9)	Display normal/ reverse	0	1	0	1	0	1	0	0	1	1	0 1	Sets the LCD display normal/ reverse 0: normal, 1: reverse
(10)	Display all points ON/OFF	0	1	0	1	0	1	0	0	1	0	0 1	Display all points 0: normal display 1: all points ON
(11)	LCD bias set	0	1	0	1	0	1	0	0	0	1	0 1	Sets the LCD drive voltage bias ratio SED1565*** ..... 0: 1/9, 1: 1/7 SED1566*** /SED1568*** /SED1569*** ..... 0: 1/8, 1: 1/6 SED1567*** 0: 1/6, 1: 1/5
(12)	Read/modify/write	0	1	0	1	1	1	0	0	0	0	0	Column address increment At write: +1 At read: 0
(13)	End	0	1	0	1	1	1	0	1	1	1	0	Clear read/modify/write
(14)	Reset	0	1	0	1	1	1	0	0	0	1	0	Internal reset
(15)	Common output mode select	0	1	0	1	1	0	0	0 1	*	*	*	Select COM output scan direction 0: normal direction, 1: reverse direction
(16)	Power control set	0	1	0	0	0	1	0	1	Operating mode			Select internal power supply operating mode
(17)	V_5 voltage regulator internal resistor ratio set	0	1	0	0	0	1	0	0	Resistor ratio			Select internal resistor ratio (Rb/Ra) mode
(18)	Electronic volume mode set	0	1	0	1	0	0	0	0	0	0	1	
	Electronic volume register set	0	1	0	*	*	Electronic volume value						Set the V_5 output voltage electronic volume register
(19)	Static indicator ON/OFF	0	1	0	1	0	1	0	1	1	0	0 1	0: OFF, 1: ON
	Static indicator register set	0	1	0	*	*	*	*	*	*	Mode		Set the flashing mode
(20)	Power saver												Display OFF and display all points ON compound command
(21)	NOP	0	1	0	1	1	1	0	0	0	1	1	Command for non-operation
(22)	Test	0	1	0	1	1	1	1	*	*	*	*	Command for IC test. Do not use this command

(Note) *: disabled data

Instruction Description

1. Display On/Off

A0	E	RW	D7	D6	D5	D4	D3	D2	D1	**D0**
0	1	0	1	0	1	0	1	1	1	**-**

D0=1 Display On
D0=0 Display Off

2. Set Display Start Line

A0	E	RW	D7	D6	**D5**	**D4**	**D3**	**D2**	**D1**	**D0**
0	1	0	0	1	**ST5**	**ST4**	**ST3**	**ST2**	**ST1**	**ST0**

ST5	**ST4**	**ST3**	**ST2**	**ST1**	**ST0**	**Line Address**
0	0	0	0	0	0	0
0	0	0	0	0	1	1
.	.	.	.	.	.	.
1	1	1	1	1	0	62
1	1	1	1	1	1	63

3. Set Page Address

A0	E	RW	D7	D6	D5	D4	**D3**	**D2**	**D1**	**D0**
0	1	0	1	0	1	1	**P3**	**P2**	**P1**	**P0**

P3	**P2**	**P1**	**P0**	**Page**
0	0	0	0	0
0	0	0	1	1
.	.	.	.	.
0	1	1	1	7
1	0	0	0	8

4.Set Column Address

A0	E	RW	D7	D6	D5	D4	**D3**	**D2**	**D1**	**D0**
0	1	0	0	0	0	0	**Y7**	**Y6**	**Y5**	**Y4**
0	1	0	0	0	0	0	**Y3**	**Y2**	**Y1**	**Y0**

Y4-Y7 :Higter Bits
Y0-Y3 :Lower Bits

Y7	Y6	Y5	Y4	Y3	Y2	Y1	Y0	Column Address
0	0	0	0	0	0	0	0	0
0	0	0	0	0	0	0	1	1
.	.	.	.	.	.	.	.	.
1	0	0	0	0	0	1	0	130
1	0	0	0	0	0	1	1	131

5. Read Status

A0	E	RW	D7	D6	D5	D4	D3	D2	D1	D0
0	0	1	Status				0	0	0	0

6. Write Display Data

A0	E	RW	D7	D6	D5	D4	D3	D2	D1	D0
1	1	0	Write Data							

7. Read Display Data

A0	E	RW	D7	D6	D5	D4	D3	D2	D1	D0
1	0	1	Read Data							

8. ADC Select

A0	E	RW	D7	D6	D5	D4	D3	D2	D1	**D0**
0	1	0	1	0	1	0	0	0	0	**-**

D0=1 Display Reverse
D0=0 Display Normal

9. Normal/Reverse Display

A0	E	RW	D7	D6	D5	D4	D3	D2	D1	**D0**
0	1	0	1	0	1	0	0	1	1	**D**

When **D**=1 Reverse Display
D=0 Normal Display

10. Entire Display On/Off

A0	E	RW	D7	D6	D5	D4	D3	D2	D1	D0
0	1	0	1	0	1	0	0	1	0	D

When D=0 Nornal Display D=1 Reverse Display

11. Set LCD Bias

A0	E	RW	D7	D6	D5	D4	D3	D2	D1	**D0**
0	1	0	1	0	1	0	0	0	1	**D**

When **D**=0 Bias=1/9
D=1 Bias=1/7

Read-Modify-Write

A0	E	RW	D7	D6	D5	D4	D3	D2	D1	D0
0	1	0	1	1	1	0	0	0	0	0

13. End

A0	E	RW	D7	D6	D5	D4	D3	D2	D1	D0
0	1	0	1	1	1	0	1	1	1	0

14. Reset

A0	E	RW	D7	D6	D5	D4	D3	D2	D1	D0
0	1	0	1	1	1	0	0	0	1	0

15.Command Output Mode Select

A0	E	RW	D7	D6	D5	D4	**D3**	D2	D1	D0
0	1	0	1	1	0	0	**D**	*	*	*

16. Set Power Control

A0	E	RW	D7	D6	D5	D4	D3	**D2**	**D1**	**D0**
0	1	0	0	0	1	0	1	**A2**	**A1**	**A0**

When **A0**=1 Follower Circuit Is Turn On
A1=1 Regulator Circuit Is Turn On
A2=1 Booster Circuit Is Turn On

17. V0 Voltage Regulator Internal Resistor Ratio Set

A0	E	RW	D7	D6	D5	D4	D3	D2	D1	D0
0	1	0	0	0	1	0	0	R2	R1	R0

18. The Electronic Volume Mode Set

A0	E	RW	D7	D6	D5	D4	D3	D2	D1	D0
0	1	0	1	0	0	0	0	0	0	1

19. Electronic Volume Register Set

A0	E	RW	D7	D6	**D5**	**D4**	**D3**	**D2**	**D1**	**D0**
0	1	0	0	0	**SV5**	**SV4**	**SV3**	**SV2**	**SV1**	**SV0**

20. Static Indicator On/Off

A0	E	RW	D7	D6	D5	D4	D3	D2	D1	**D0**
0	1	0	1	0	1	0	1	1	0	**D**

21.Nop

A0	E	RW	D7	D6	D5	D4	D3	D2	D1	D0
0	1	0	1	1	1	0	0	0	1	1

22.Booster Ratio Select Mode Set

A0	E	RW	D7	D6	D5	D4	D3	D2	D1	D0
0	1	0	1	1	1	1	1	0	0	0

23.Booster Ratio Register Set

A0	E	RW	D7	D6	D5	D4	D3	D2	D1	D0
0	1	0	0	0	0	0	0	0	0	0
0	1	0	0	0	0	0	0	0	0	1
0	1	0	0	0	0	0	0	0	1	1

D1、D0=00,2x,3x,4x　　D1、D0=01,5x　　D1、D0=11,6x

Application Example
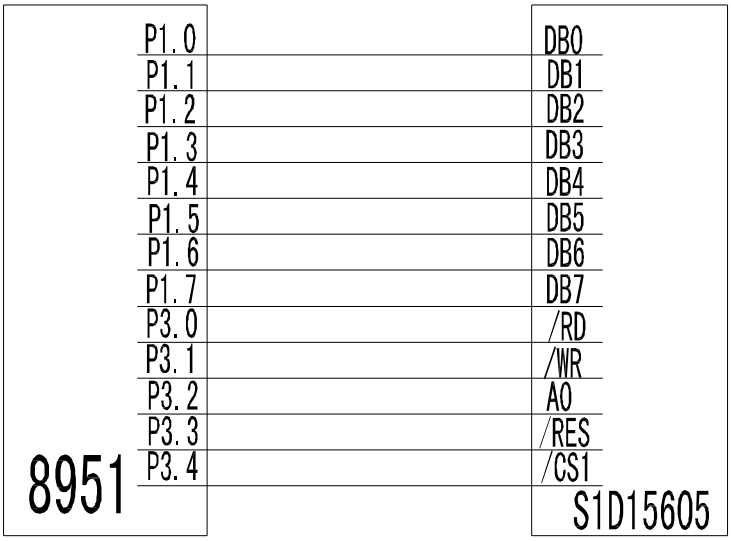
Application Circuit