TW series

Hall effect thumbwheels

Distinctive features and specifications

- ❑ 5 million cycles
- ❑ Hall effect technology
- ❑ Proportional control
- ❑ Self-centering single axis design
- ❑ Redundant outputs available
- ❑ Choice of wheel colors: black, red, blue, or gray

MECHANICAL (FOR X, Y AXIS)

- Break Out Force: 0.7N (0.15lbf)
- Mechanical Angle of Movement: 80° (±40° from center)
- Expected Life: 5 million cycles
- Lever Action (Centering): Spring centering

ENVIRONMENTAL

- Operating Temperature: -40°C to +85°C (-40°F to +185°F)
- Storage Temperature: -40°C to +85°C (-40°F to +185°F)
- Sealing: IP67*
- EMC Immunity Level: EN61000-4-3 (extended)
- EMC Emissions Level: EN61000-6-3:2001
- ESD: EN61000-4-2 (extended)

ELECTRICAL

- Sensor: Hall effect
- Resolution: 1.22mV
- Supply Voltage Range: 5V ± 0.01V
- Reverse Polarity Max: -10V
- Overvoltage Max: 20V
- Output Impedance: 2Ω
- Return to Center Voltage (No Load): ±200mV
- Error Signal: 1.0%

NOTES:
* Electronics sealed to IP67.
Exact specifications are subject to configuration.
All values are nominal.

TW [ ] [ ] [ ] [ ] [ ]

SERIES

Model

0	With Tab
1	Without Tab

Output Options

1	0V to 5V
2	0.5V to 4.5V
3	1V to 4V
4	0V to 5V - Sensor 1 0V to 5V - Sensor 2
5	0.5V to 4.5V - Sensor 1 0.5V to 4.5V - Sensor 2
6	1V to 4V - Sensor 1 1V to 4V - Sensor 2
7	0V to 5V - Sensor 1 5V to 0V - Sensor 2
8	0.5V to 4.5V - Sensor 1 4.5V to 0.5V - Sensor 2
9	1V to 4V - Sensor 1 4V to 1V - Sensor 2

Actuator Color

BLK	Black
RED	Red
BLU	Blue
GRY	Gray

Spring Tension

1	Standard

Termination

1	2.54mm (.100") Pitch Male Header
2	22AWG 41cm PTFE
3	28AWG 41cm PTFE
4	2.54mm (.100") Pitch Male Header with Mating Harness 25cm

NOTES:

Mounting accessories: steel spring retainer, insertion tool, and sealing gasket.

Note: The company reserves the right to change specifications without notice.

TW series

Hall effect thumbwheels

Overview

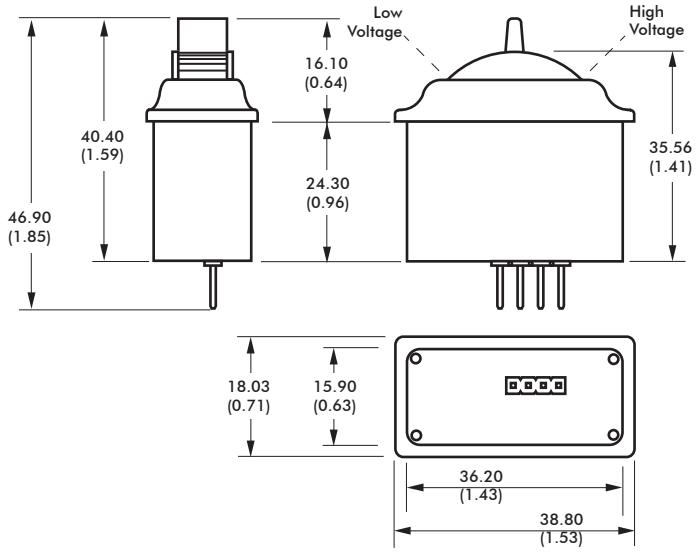

MOUNTING OPTIONS

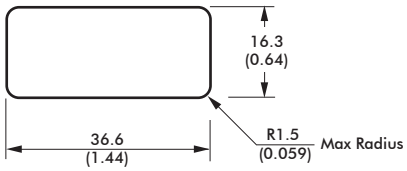

STEEL SPRING RETAINER*

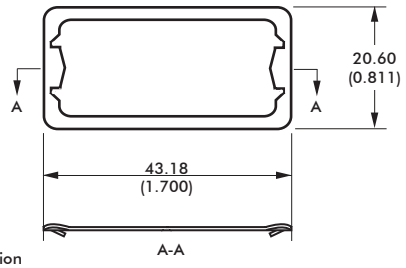

* - used for installation

NOTE:

1. Dimensions are in mm/(inch).

EXAMPLE APPLICATION

INSTALLATION

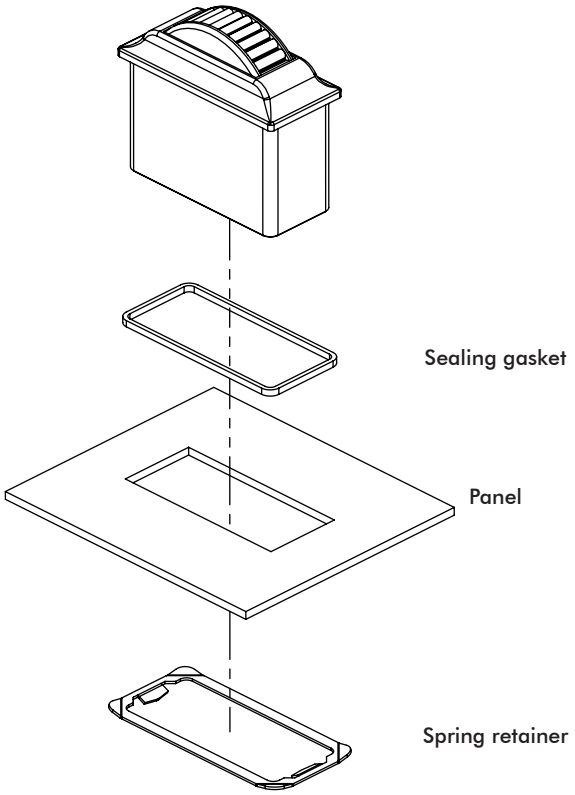

Note: The company reserves the right to change specifications without notice.

VOLTAGE OUTPUT OPTIONS

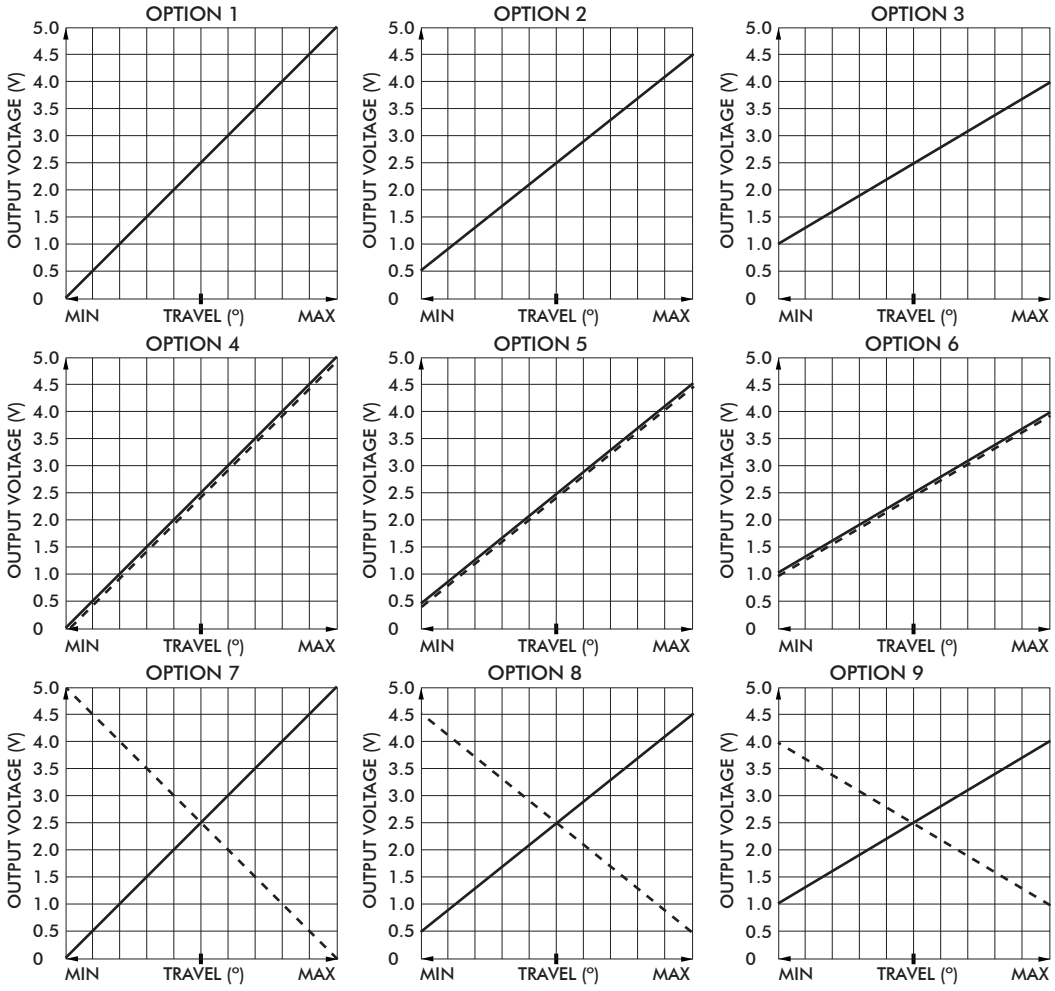

CONNECTOR PINOUT

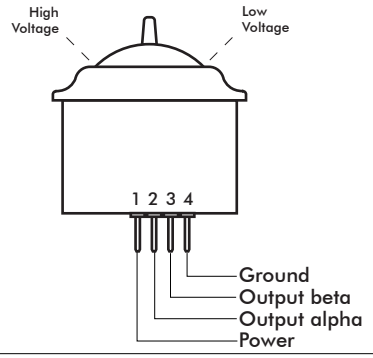

CONNECTOR TERMINATION OPTION

The TW Series Thumbwheel may be specified with a TE Connectivity 2.54mm pitch male header. When selected from the "Option Selection" guide, both single and dual output configurations feature a four position TE 3-647166-4 connector.

OPTIONAL MATING HARNESS

The TW Series is available with an optional mating harness. The four function harness is part number 505-498.

Wire type: 22AWG 25cm PTFE
Connector: Molex 0050579504

DEFAULT WIRE COLOR CODE

COLOR	FUNCTION	AWG
RED	+5V	22
BLACK	Ground	
BLUE	Output alpha	
BLUE/WHITE	Output beta	

CIRCUIT	WIRE COLOR
PIN 1	BLACK
PIN 2	BLUE/WHITE
PIN 3	BLUE
PIN 4	RED

Note: The company reserves the right to change specifications without notice.