DUAL 1-OF-4 DECODER/DEMULTIPLEXER

The HEF4555B is a dual 1-of-4 decoder/demultiplexer. Each has two address inputs (A_0 and A_1), an active LOW enable input ($\overline{E}$) and four mutually exclusive outputs which are active HIGH (O_0 to O_3). When used as a decoder, $\overline{E}$ when HIGH, forces O_0 to O_3 LOW. When used as a demultiplexer, the appropriate output is selected by the information on A_0 and A_1 with $\overline{E}$ as data input. All unselected outputs are LOW.

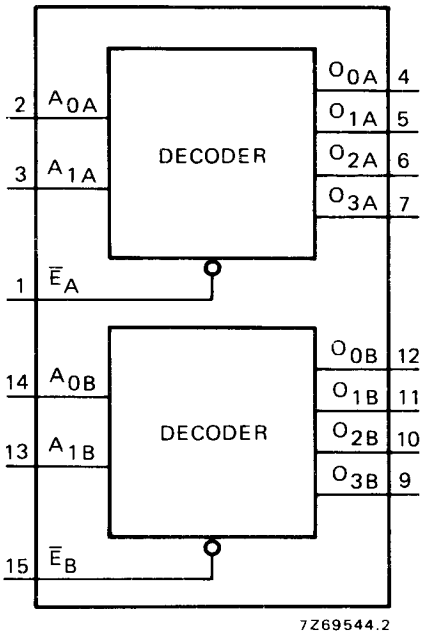

Fig. 1 Functional diagram.

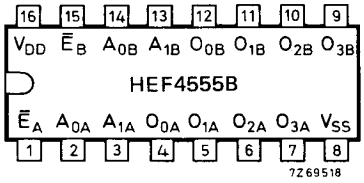

Fig. 2 Pinning diagram.

HEF4555BP : 16-lead DIL; plastic (SOT-38Z).
HEF4555BD: 16-lead DIL; ceramic (cerdip) (SOT-74).
HEF4555BT : 16-lead mini-pack; plastic (SO-16; SOT-109A).

PINNING

$\overline{E}$	enable inputs (active LOW)
A_0 and A_1	address inputs
O_0 to O_3	outputs (active HIGH)

FAMILY DATA
I_{DD} LIMITS category MSI } see Family Specifications

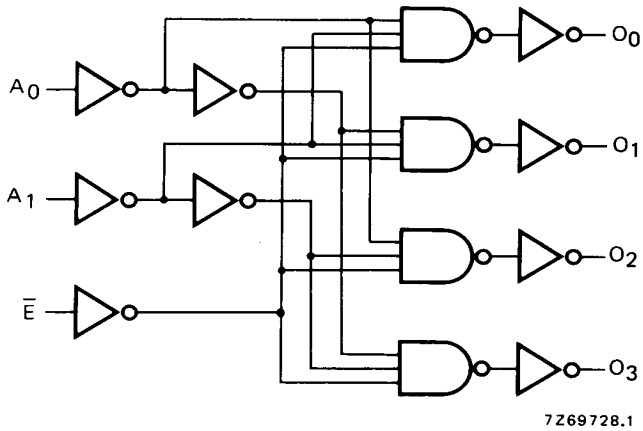

Fig. 3 Logic diagram (one decoder/multiplexer).

TRUTH TABLE

inputs			outputs			
$\overline{E}$	A_0	A_1	O_0	O_1	O_2	O_3
L	L	L	H	L	L	L
L	H	L	L	H	L	L
L	L	H	L	L	H	L
L	H	H	L	L	L	H
H	X	X	L	L	L	L

H = HIGH state (the more positive voltage)
L = LOW state (the less positive voltage)
X = state is immaterial

A.C. CHARACTERISTICS

V_{SS} = 0 V; T_{amb} = 25 °C; C_L = 50 pF; input transition times ≤ 20 ns

	V_{DD} V	symbol	min.	typ.	max.		typical extrapolation formula
Propagation delays							
$A_n \rightarrow O_n$	5			115	230	ns	88 ns + (0,55 ns/pF) C_L
HIGH to LOW	10	t_{PHL}		45	90	ns	34 ns + (0,23 ns/pF) C_L
	15			30	65	ns	22 ns + (0,16 ns/pF) C_L
	5			140	280	ns	113 ns + (0,55 ns/pF) C_L
LOW to HIGH	10	t_{PLH}		55	105	ns	44 ns + (0,23 ns/pF) C_L
	15			40	75	ns	32 ns + (0,16 ns/pF) C_L
$\overline{E}_n \rightarrow O_n$	5			125	250	ns	98 ns + (0,55 ns/pF) C_L
HIGH to LOW	10	t_{PHL}		50	95	ns	39 ns + (0,23 ns/pF) C_L
	15			30	65	ns	22 ns + (0,16 ns/pF) C_L
	5			150	295	ns	123 ns + (0,55 ns/pF) C_L
LOW to HIGH	10	t_{PLH}		55	110	ns	44 ns + (0,23 ns/pF) C_L
	15			40	75	ns	32 ns + (0,16 ns/pF) C_L
Output transition times	5			60	120	ns	10 ns +((1,0 ns/pF) C_L
HIGH to LOW	10	t_{THL}		30	60	ns	9 ns + (0,42 ns/pF) C_L
	15			20	40	ns	6 ns + (0,28 ns/pF) C_L
	5			60	120	ns	10 ns + (1,0 ns/pF) C_L
LOW to HIGH	10	t_{TLH}		30	60	ns	9 ns + (0,42 ns/pF) C_L
	15			20	40	ns	6 ns + (0,28 ns/pF) C_L

	V_{DD} V	typical formula for P (μW)	where
Dynamic power dissipation per package (P)	5	$4500\ f_i + \Sigma(f_oC_L) \times V_{DD}^2$	f_i = input freq. (MHz)
	10	$18\,800\ f_i + \Sigma(f_oC_L) \times V_{DD}^2$	f_o = output freq. (MHz)
	15	$45\,700\ f_i + \Sigma(f_oC_L) \times V_{DD}^2$	C_L = load capacitance (pF)
			$\Sigma(f_oC_L)$ = sum of outputs
			V_{DD} = supply voltage (V)

APPLICATION INFORMATION

Some examples of applications for the HEF4555B are:

- Code conversion.
- Address decoding.
- Demultiplexing: when using the enable input as data input.