HT82M39A
3-Key 3D PS/2 Mouse Controller

Feature

- Microsoft Intelli 3D PS/2 and IBM PS/2 mouse compatible
- Supports rolling buttons in PS/2 mouse mode
- X/Y axis photo input with built-in Holtek's special dynamic photo-input resistor
- Supports three buttons and three axis (X, Y, Z) inputs
- Z axis can support two kinds of scroller input (optomechanical and mechanical)
- 2MHz RC oscillator for system frequency with an external pull-high resistor
- 16-pin DIP package

General Description

The HT82M39A is a Plug and Play PS/2 3D mouse controller. It is compatible with Microsoft Intelli 3D PS/2 mouse. The Z axis can support two kinds of scroller input, namely; optomechanical and mechanical.

Pin Assignment

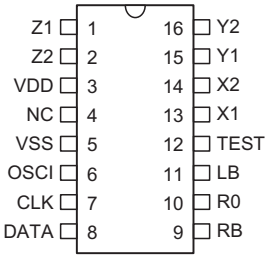

HT82M39A
—16 DIP-A

Pin Description

Pin No.	Pin Name	I/O	Description
1, 2	Z1, Z2	I	"Z" axis input supports two kinds of scroller input; optomechanical and mechanical.
3	VDD	—	Positive power supply
4	NC	—	No connection
5	VSS	—	Negative power supply, ground
6	OSCI	I	2MHz RC oscillator for system frequency with external pull-high resistor and built-in C
7	CLK	I/O	"CLK I/O": PS/2 mouse CLK line. NMOS open drain output with 5kΩ pull-high resistor.
8	DATA	I/O	"DATA I/O": PS/2 mouse DATA line. NMOS open drain output with 5kΩ pull-high resistor.
9~11	RB, RO, LB	I	Right Button: Normal pull-low (50kΩ), Pressing the button connects to high. Rolling Button: Normal pull-low (50kΩ), Pressing the button connects to high. Left Button: Normal pull-low (50kΩ), Pressing the button connects to high.
12	TEST	I	For IC manufacture testing, user should leave it floating.
13~16	X1, X2, Y1, Y2	I	X/Y axis photo input with built-in Holtek's special dynamic photo input resistor

Absolute Maximum Ratings

Supply Voltage .....–0.3V to 6.5V

Input Voltage.....V_{SS}–0.3V to V_{DD}+0.3V

Storage Temperature .....–50°C to 125°C

Operating Temperature.....–25°C to 70°C

Note: These are stress ratings only. Stresses exceeding the range specified under "Absolute Maximum Ratings" may cause substantial damage to the device. Functional operation of this device at other conditions beyond those listed in the specification is not implied and prolonged exposure to extreme conditions may affect device reliability.

Electrical Characteristics

Ta=25°C

Symbol	Parameter	Test Conditions		Min.	Typ.	Max.	Unit
		V_{DD}	Conditions				
V_{DD}	Operating Voltage	—	—	4.75	5.0	5.25	V
I_{OP}	Operating Current	5V	R_{OSC}=130kΩ	—	—	15	mA
f_{OSC}	RC Oscillator	5V	R_{OSC}=130kΩ	1.6	2	2.4	MHz
V_{IL1}	Input Low Voltage (Z1, Z2)	5V	—	0	—	1.5	V
V_{IH1}	Input High Voltage (Z1, Z2)	5V	—	2.2	—	5	V
V_{IL2}	Input Low Voltage (CLK, DATA)	5V	—	0	—	0.8	V
V_{IH2}	Input High Voltage (CLK, DATA)	5V	—	2.0	—	5.0	V
R_{PH2}	Pull-high Resistor (CLK, DATA)	5V	V_{IL}=0V	2	5	10	kΩ
Isink	Sink Current (CLK, DATA)	5V	V_{OH}=0.4V	4	—	—	mA
V_{IL3}	Input Low Voltage (RB, Ro, LB)	5V	—	0	—	1.0	V
V_{IH3}	Input High Voltage (RB, Ro, LB)	5V	—	1.8	—	5	V
R_{PL3}	Pull-low Resistor (RB, Ro, LB)	5V	V_{IL}=0V	3.0	60	125	kΩ
V_{IL4}	Input Low Voltage (X1,X2,Y1,Y2)	5V	—	0	—	1.5	V
V_{IH4}	Input high Voltage (X1, X2, Y1, Y2)	5V	—	2.2	—	5	V
R_{PL5}	Dynamic Photo-resistor (X1, X2, Y1, Y2, Z1, Z2)	5V	—	See Dynamic resistor characteristics			

Dynamic Resistor Characteristics

- R-V curve

Photo_R: R-V

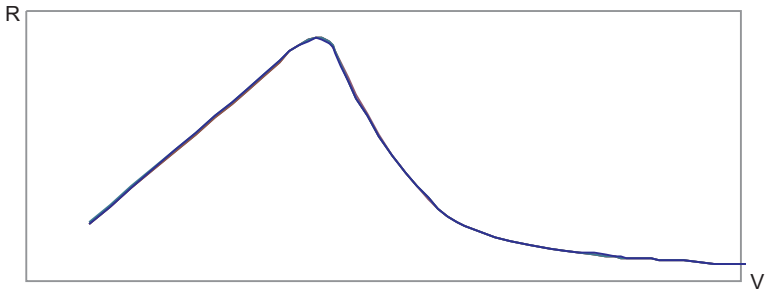

Functional Description

PS/2 Mouse

- PS/2 status byte
  Byte 1
  bit
  7: Reserved
  6: 0=Stream Mode, 1=Remote Mode
  5: 0=Disabled, 1=Enabled
  4: 0=Scaling 1:1, 1=Scaling 2:1
  3: 1=Wrap Mode, 0=Stream or Remote
  (different from IBM specs.)
  2: 1=Left Button Pressed
  1: 1=Middle Button Pressed
  0: 1=Right Button Pressed
  Byte 2
  Bit 0~7 current resolution setting
  (Bit 0=LSB)
  Byte 3
  Bit 0~7 current sampling rate (Bit 0=LSB)

- Standard PS/2 data format
  Variable rps, 0, 8, 1, bidirectional, synchronous

Bit No.	7	6	5	4	3	2	1	0
1st word	YV	XV	YS	XS	1	M	R	L
2nd word	X7	X6	X5	X4	X3	X2	X1	X0
3rd word	Y7	Y6	Y5	Y4	Y3	Y2	Y1	Y0

- Data format for 3D PS/2
  Variable rps, 0, 8, 1, bidirectional, synchronous

Bit No.	7	6	5	4	3	2	1	0
1st word	YV	XV	YS	XS	1	Ro	R	L
2nd word	X7	X6	X5	X4	X3	X2	X1	X0
3rd word	Y7	Y6	Y5	Y4	Y3	Y2	Y1	Y0
4th word	Z7	Z6	Z5	Z4	Z3	Z2	Z1	Z0

The x/y data report is 9-bit 2′s complement

The z data report is 8-bit 2′s complement

X movement towards the right is positive, moving towards the left is negative

Y upward movement is positive, moving down is negative

Z rolling towards the user is positive, else negative

Button status: 1=pressed, 0=released

- Mouse mode changes between Standard and 3D PS/2 mode
  Sending the commands in the following sequence will set the mouse to 3D PS/2 mode.

Command	Response From Mouse
F3h	FAh
C8h	FAh
F3h	FAh
64h	FAh
F3h	FAh
50h	FAh
F2h	FAh, 03h

  - Any time the PC sends a reset ″FFh″ command to the mouse, it will reset the mouse to Standard PS/2 mode.
  - After power-on reset is initiated, the mouse is set to Standard PS/2 mode.

Timing Diagrams

X, Y Axis Photo-Coupler Crossed Width

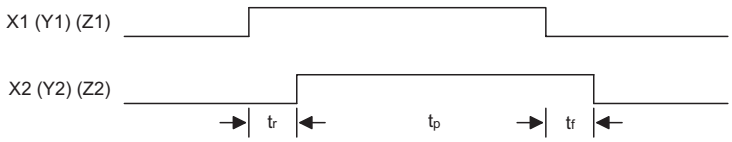

Note: For X, Y-axis t_r, t_p, t_f > 30μs
For Z-axis t_r, t_p, t_f > 1ms

X/Y/Z Axis Counting

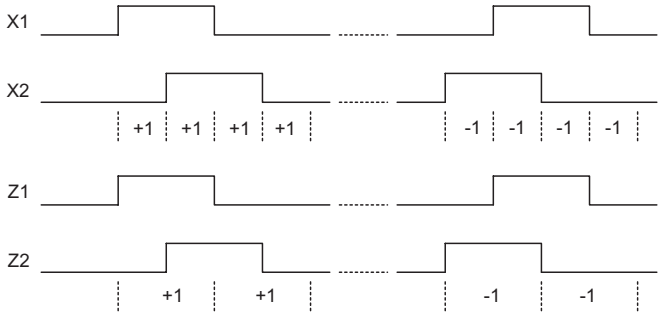

PS/2 Mouse

- Data output

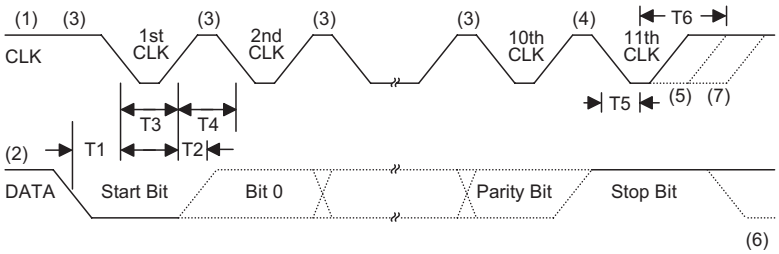

	Timing Parameter	Min./Max.
T1	DATA transition to the falling edge of CLK	5/25 μsec
T2	Rising edge of CLK to DATA transition	5/T4-5 μsec
T3	Inactive CLK Duration	30/50 μsec
T4	Active CLK Duration	30/50 μsec
T5	Minimum time to inhibit MOUSE after clock 11	>0 μsec
T6	Maximum time to inhibit MOUSE after clock 11 to ensure MOUSE does not start another transmission	<50 μsec

- Data input

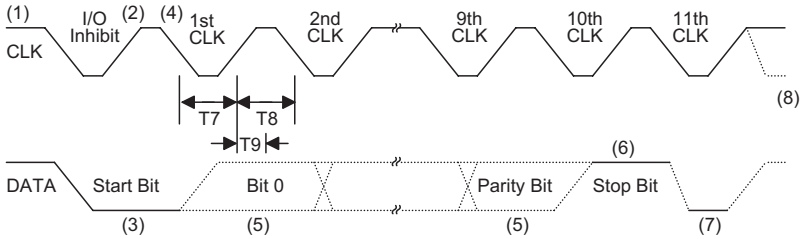

	Timing Parameter	Min./Max.
T7	CLK Duration, low	30/50 μsec
T8	CLK Duration, high	30/50 μsec
T9	Time from low to high CLK transition to time when MOUSE samples DATA line	5/25 μsec

Application Circuits

HT82M39A Z Axis Optomechanical (This Application Circuit is for Reference Only)

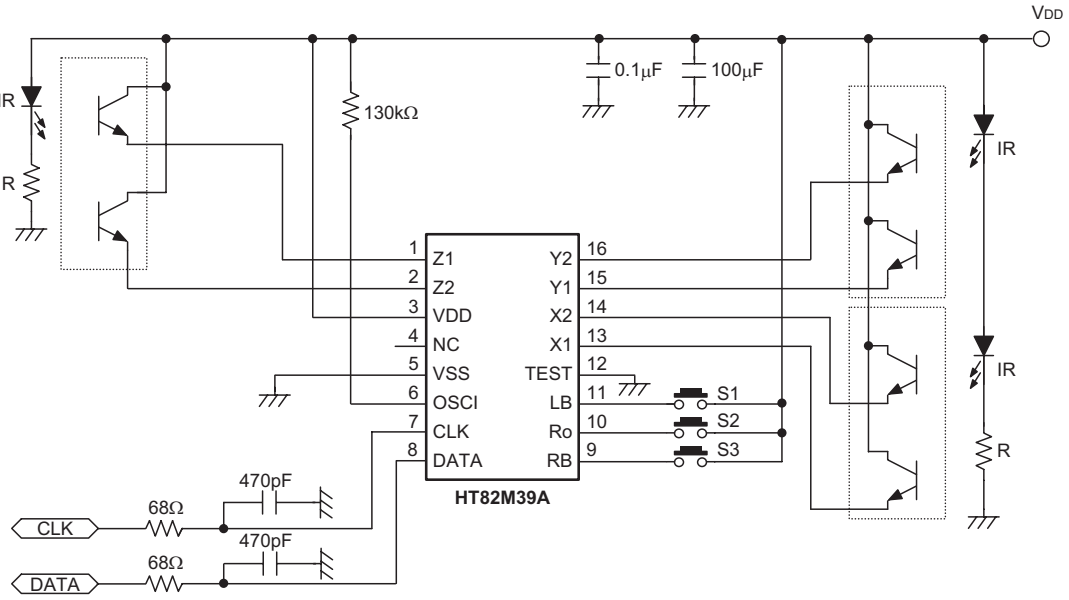

HT82M39A Z Axis Mechanical (This Application Circuit is for Reference Only)

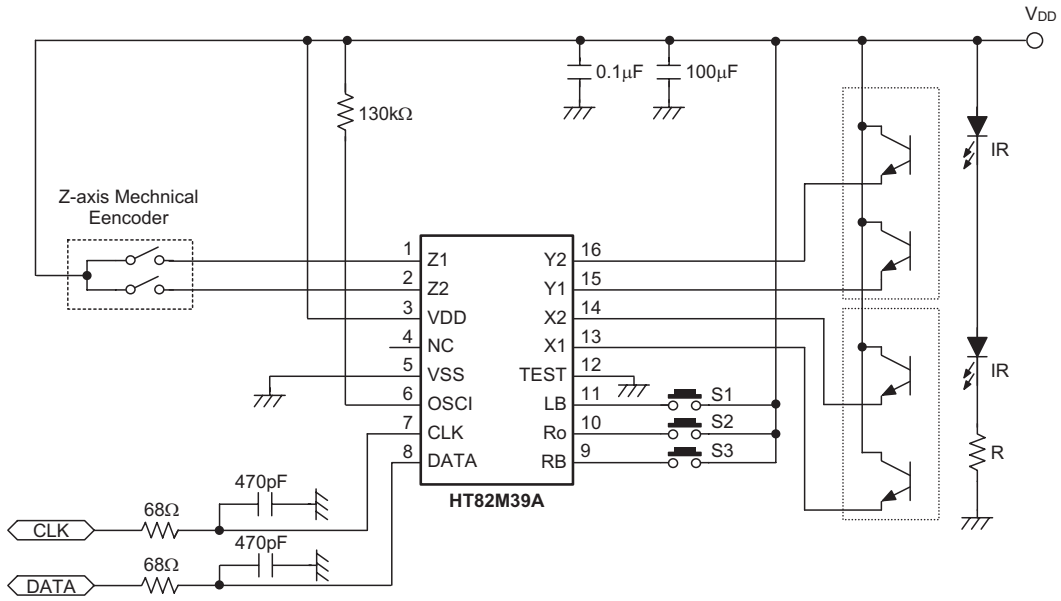

Note: R depends on IR characteristics, R=1K for reference only

Package Information

16-pin DIP (300mil) Outline Dimensions

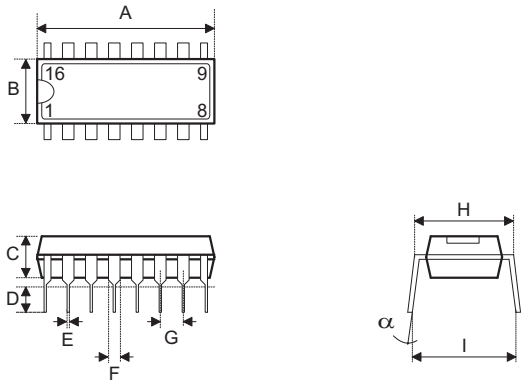

Symbol	Dimensions in mil		
	Min.	Nom.	Max.
A	745	—	775
B	240	—	260
C	125	—	135
D	125	—	145
E	16	—	20
F	50	—	70
G	—	100	—
H	295	—	315
I	335	—	375
α	0°	—	15°

Holtek Semiconductor Inc. (Headquarters)
No.3, Creation Rd. II, Science Park, Hsinchu, Taiwan
Tel: 886-3-563-1999
Fax: 886-3-563-1189
http://www.holtek.com.tw

Holtek Semiconductor Inc. (Taipei Sales Office)
4F-2, No. 3-2, YuanQu St., Nankang Software Park, Taipei 115, Taiwan
Tel: 886-2-2655-7070
Fax: 886-2-2655-7373
Fax: 886-2-2655-7383 (International sales hotline)

Holtek Semiconductor Inc. (Shanghai Sales Office)
7th Floor, Building 2, No.889, Yi Shan Rd., Shanghai, China 200233
Tel: 021-6485-5560
Fax: 021-6485-0313
http://www.holtek.com.cn

Holtek Semiconductor Inc. (Shenzhen Sales Office)
5/F, Unit A, Productivity Building, Cross of Science M 3rd Road and Gaoxin M 2nd Road, Science Park, Nanshan District, Shenzhen, China 518057
Tel: 0755-8616-9908, 8616-9308
Fax: 0755-8616-9533

Holtek Semiconductor Inc. (Beijing Sales Office)
Suite 1721, Jinyu Tower, A129 West Xuan Wu Men Street, Xicheng District, Beijing, China 100031
Tel: 010-6641-0030, 6641-7751, 6641-7752
Fax: 010-6641-0125

Holtek Semiconductor Inc. (Chengdu Sales Office)
709, Building 3, Champagne Plaza, No.97 Dongda Street, Chengdu, Sichuan, China 610016
Tel: 028-6653-6590
Fax: 028-6653-6591

Holmate Semiconductor, Inc. (North America Sales Office)
46729 Fremont Blvd., Fremont, CA 94538
Tel: 510-252-9880
Fax: 510-252-9885
http://www.holmate.com

Copyright © 2005 by HOLTEK SEMICONDUCTOR INC.

The information appearing in this Data Sheet is believed to be accurate at the time of publication. However, Holtek assumes no responsibility arising from the use of the specifications described. The applications mentioned herein are used solely for the purpose of illustration and Holtek makes no warranty or representation that such applications will be suitable without further modification, nor recommends the use of its products for application that may present a risk to human life due to malfunction or otherwise. Holtek's products are not authorized for use as critical components in life support devices or systems. Holtek reserves the right to alter its products without prior notification. For the most up-to-date information, please visit our web site at http://www.holtek.com.tw.