A Dimensions: [mm]

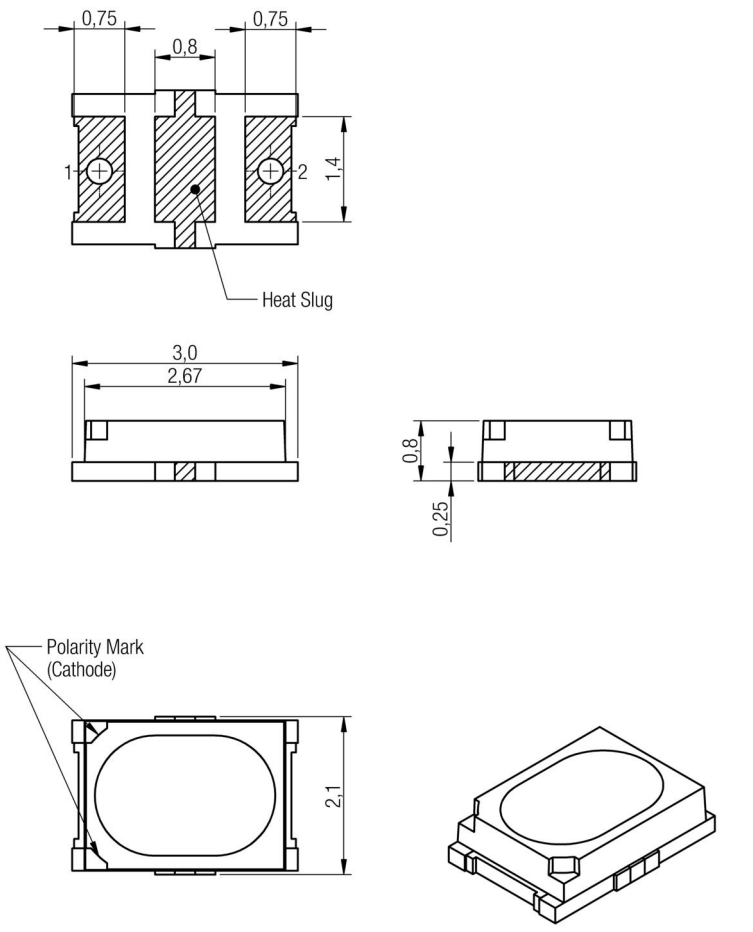

Scale - 10:1

B Recommended land pattern: [mm]

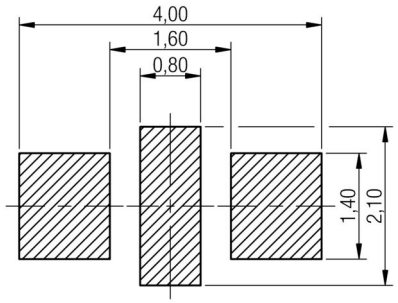

Scale - 10:1

C Schematic:

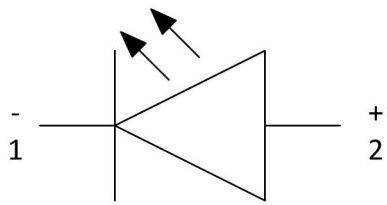

D Absolute Maximum Ratings (Ambient Temperature 25°C):

Properties	Test conditions		Value	Unit
Power dissipation		P_{Diss}	210	mW
Peak Forward Current	duty/10@1kHz	$I_{F\ Peak}$	100	mA
Continuous Forward Current		I_F	60	mA
Reverse Voltage		V_{Rev}	5	V
ESD Threshold/ Human Body Modell		$V_{ESD\ HBM}$	2000	V
Thermal resistance junction to solder point		θ_{JS}	38	°C/ W
Junction temperature		T_j	130	°C

E General information:

- Operating temperature: -40°C to +80°C
- Storage temperature (on tape & reel): -40°C to +85°C; 60% RH max.

Optical Properties:

Properties	Value
Chip Technology	InGaN
Emitting Color	Sunrise
Lens Type	Top LED

REV	DATE	BY	CHECKED
1.1	2014-06-03	SSt	PLD
1.0	2014-01-30	SSt	PLD

Projection

Würth Elektronik eiSos GmbH & Co. KG
EMC & Inductive Solutions
Max-Eyth-Str. 1
74638 Waldenburg
Germany
Tel. +49 (0) 79 42 945 - 0
www.we-online.com
eiSos@we-online.com

DESCRIPTION

WL-SWTP SMD White Top View PLCC LED

Order.- No.

158302227

COMPLIANT RoHS&REACh HALOGENFREE

SIZE A4

Size: 3022

This electronic component has been designed and developed for usage in general electronic equipment only. This product is not authorized for use in equipment where a higher safety standard and reliability standard is especially required or where a failure of the product is reasonably expected to cause severe personal injury or death, unless the parties have executed an agreement specifically governing such use. Moreover Würth Elektronik eiSos GmbH & Co KG products are neither designed nor intended for use in areas such as military, aerospace, aviation, nuclear control, submarine, transportation (automotive control, train control, ship control), transportation signal, disaster prevention, medical, public information network etc.. Würth Elektronik eiSos GmbH & Co KG must be informed about the intent of such usage before the design-in stage. In addition, sufficient reliability evaluation checks for safety must be performed on every electronic component which is used in electrical circuits that require high safety and reliability functions or performance.

WÜRTH ELEKTRONIK

D Electrical & Optical Properties:

Properties	Test conditions		Value			Unit
			min.	typ.	max.	
Chromaticity coordinate X according to CIE 1931	60 mA	c_x		0.4527		
Chromaticity coordinate Y according to CIE 1931	60 mA	c_y		0.4031		
Luminous Flux	60 mA	Φ_v	18	20		lm
Forward Voltage	60 mA	V_F		3.2	3.5	V
Correlated Color Temperature	60 mA	CCT		2700		K
Reverse Current	5 V	I_{Rev}			5	µA
Color Rendering Index	60 mA	CRI	80	85		
Viewing Angle	60 mA	$2\theta_{50\%}$		120		°

F1 Viewing Angle:

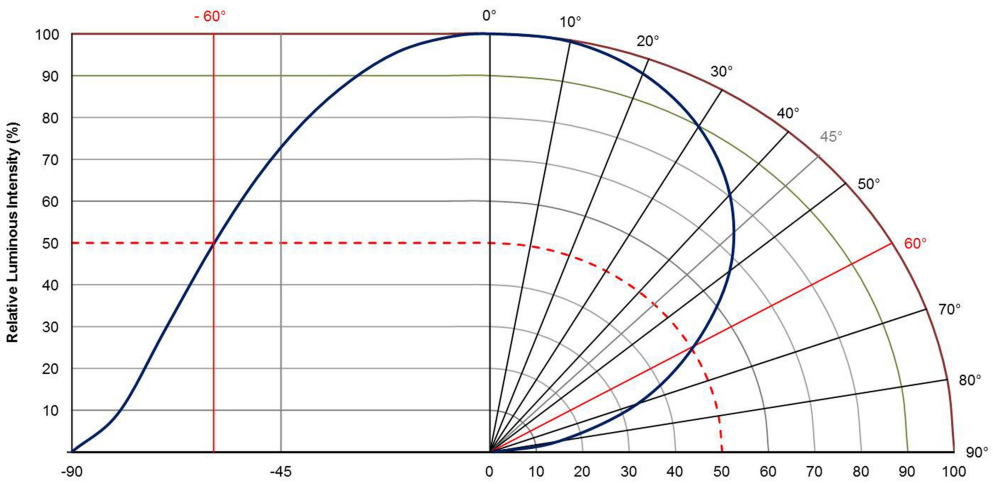

				Projection	DESCRIPTION
					WL-SWTP SMD White Top View PLCC LED
				Würth Elektronik eiSos GmbH & Co. KG EMC & Inductive Solutions Max-Eyth-Str. 1 74638 Waldenburg Germany Tel. +49 (0) 79 42 945 - 0 www.we-online.com eiSos@we-online.com	Order.- No. **158302227** COMPLIANT RoHS&REACh HALOGENFREE SIZE A4
1.1	2014-06-03	SSt	PLD		
1.0	2014-01-30	SSt	PLD		
REV	DATE	BY	CHECKED		Size: 3022

This electronic component has been designed and developed for usage in general electronic equipment only. This product is not authorized for use in equipment where a higher safety standard and reliability standard is especially required or where a failure of the product is reasonably expected to cause severe personal injury or death, unless the parties have executed an agreement specifically governing such use. Moreover Würth Elektronik eiSos GmbH & Co KG products are neither designed nor intended for use in areas such as military, aerospace, aviation, nuclear control, submarine, transportation (automotive control, train control, ship control), transportation signal, disaster prevention, medical, public information network etc.. Würth Elektronik eiSos GmbH & Co KG must be informed about the intent of such usage before the design-in stage. In addition, sufficient reliability evaluation checks for safety must be performed on every electronic component which is used in electrical circuits that require high safety and reliability functions or performance.

WÜRTH ELEKTRONIK

F2 Spectral:

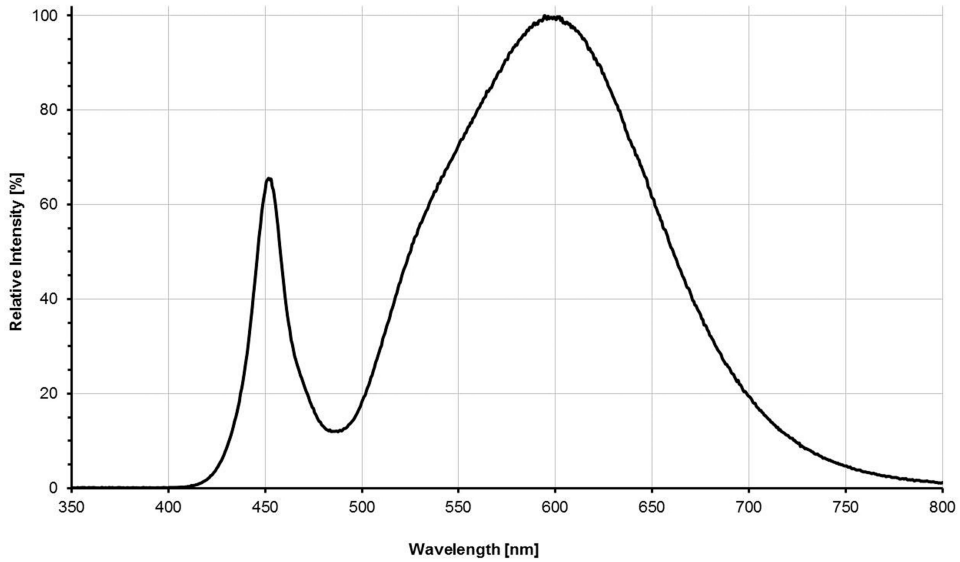

F3 Forward Current vs. Forward Voltage:

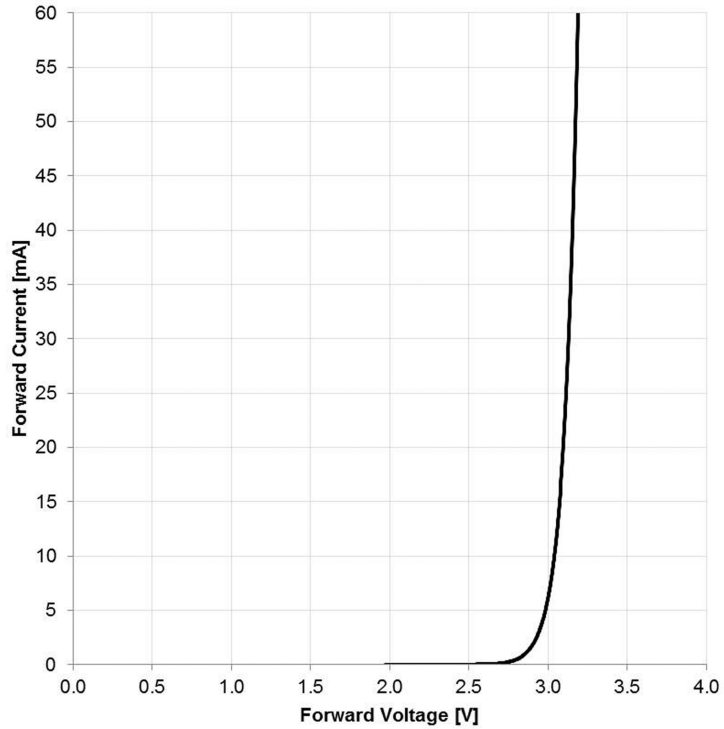

REV	DATE	BY	CHECKED
1.1	2014-06-03	SSt	PLD
1.0	2014-01-30	SSt	PLD

Projection

Würth Elektronik eiSos GmbH & Co. KG
EMC & Inductive Solutions
Max-Eyth-Str. 1
74638 Waldenburg
Germany
Tel. +49 (0) 79 42 945 - 0
www.we-online.com
eiSos@we-online.com

DESCRIPTION

WL-SWTP SMD White Top View PLCC LED

Order.- No.

158302227

COMPLIANT RoHS&REACh HALOGENFREE

SIZE A4

Size: 3022

This electronic component has been designed and developed for usage in general electronic equipment only. This product is not authorized for use in equipment where a higher safety standard and reliability standard is especially required or where a failure of the product is reasonably expected to cause severe personal injury or death, unless the parties have executed an agreement specifically governing such use. Moreover Würth Elektronik eiSos GmbH & Co KG products are neither designed nor intended for use in areas such as military, aerospace, aviation, nuclear control, submarine, transportation (automotive control, train control, ship control), transportation signal, disaster prevention, medical, public information network etc.. Würth Elektronik eiSos GmbH & Co KG must be informed about the intent of such usage before the design-in stage. In addition, sufficient reliability evaluation checks for safety must be performed on every electronic component which is used in electrical circuits that require high safety and reliability functions or performance.

F4 Luminous Intensity vs. Forward Current:

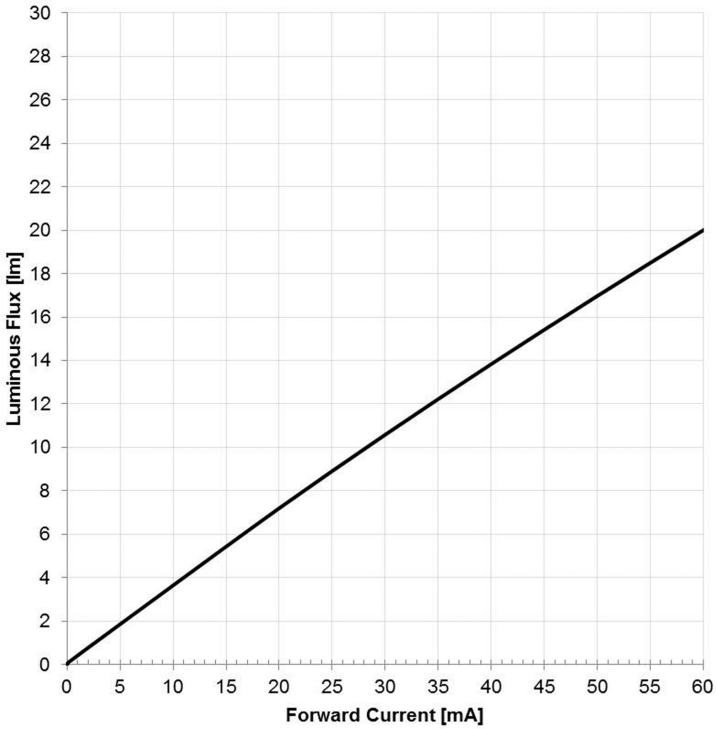

F5 Derating Curve:

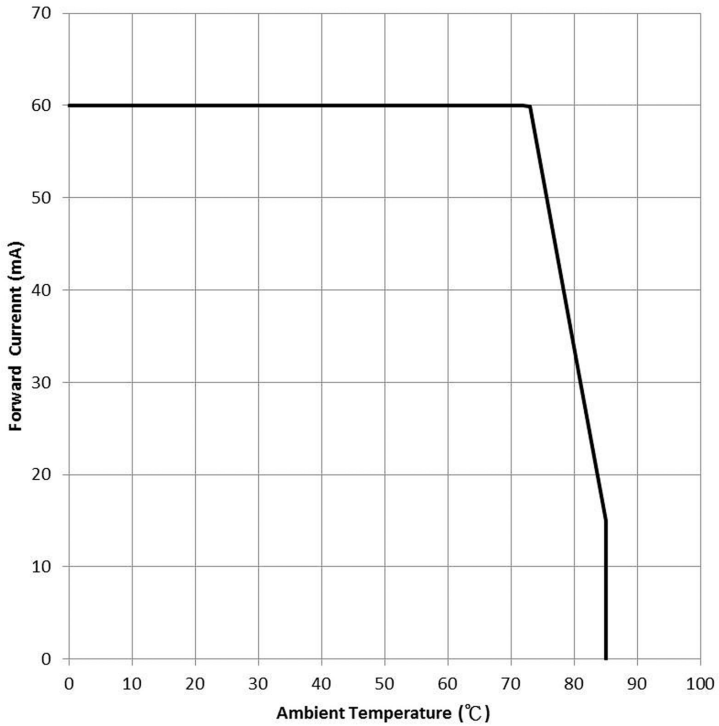

REV	DATE	BY	CHECKED
1.1	2014-06-03	SSt	PLD
1.0	2014-01-30	SSt	PLD

Projection

Würth Elektronik eiSos GmbH & Co. KG
EMC & Inductive Solutions
Max-Eyth-Str. 1
74638 Waldenburg
Germany
Tel. +49 (0) 79 42 945 - 0
www.we-online.com
eiSos@we-online.com

DESCRIPTION

WL-SWTP SMD White Top View PLCC LED

Order.- No.

158302227

COMPLIANT RoHS&REACh HALOGENFREE

SIZE

A4

Size: 3022

This electronic component has been designed and developed for usage in general electronic equipment only. This product is not authorized for use in equipment where a higher safety standard and reliability standard is especially required or where a failure of the product is reasonably expected to cause severe personal injury or death, unless the parties have executed an agreement specifically governing such use. Moreover Würth Elektronik eiSos GmbH & Co KG products are neither designed nor intended for use in areas such as military, aerospace, aviation, nuclear control, submarine, transportation (automotive control, train control, ship control), transportation signal, disaster prevention, medical, public information network etc.. Würth Elektronik eiSos GmbH & Co KG must be informed about the intent of such usage before the design-in stage. In addition, sufficient reliability evaluation checks for safety must be performed on every electronic component which is used in electrical circuits that require high safety and reliability functions or performance.

F6 Chromaticity diagram:

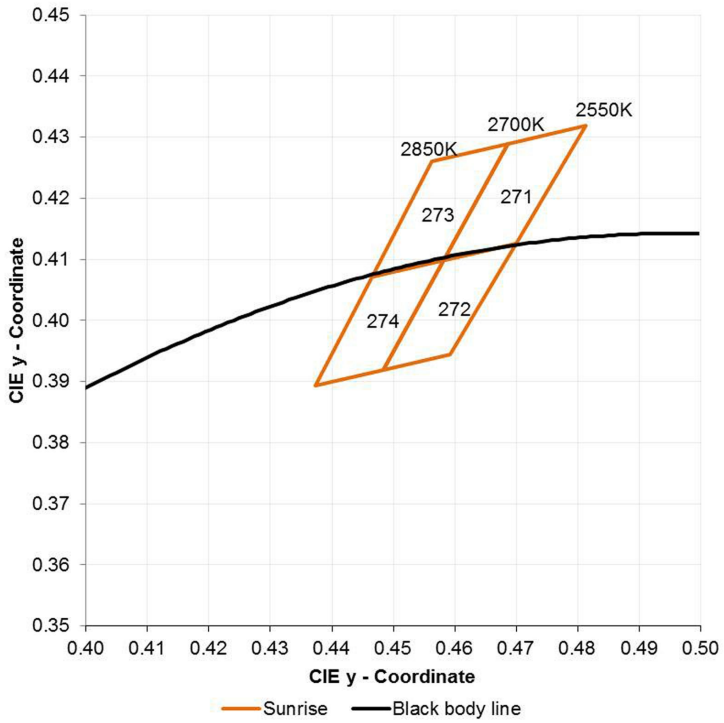

F6 Chromaticity Performance - Bin groups from

2550K to 2700K	Cx	Cy	2700K to 2850K	Cx	Cy
271	0.4582	0.4099	**273**	0.4465	0.4071
	0.4687	0.4289		0.4562	0.4260
	0.4813	0.4319		0.4687	0.4289
	0.4700	0.4126		0.4582	0.4099
	0.4582	0.4099		0.4465	0.4071
272	0.4483	0.3919	**274**	0.4373	0.3893
	0.4582	0.4099		0.4465	0.4071
	0.4700	0.4126		0.4582	0.4099
	0.4593	0.3944		0.4483	0.3919
	0.4483	0.3919		0.4373	0.3893

REV	DATE	BY	CHECKED
1.1	2014-06-03	SSt	PLD
1.0	2014-01-30	SSt	PLD

Projection

Würth Elektronik eiSos GmbH & Co. KG
EMC & Inductive Solutions
Max-Eyth-Str. 1
74638 Waldenburg
Germany
Tel. +49 (0) 79 42 945 - 0
www.we-online.com
eiSos@we-online.com

DESCRIPTION

WL-SWTP SMD White Top View PLCC LED

Order.- No.

158302227

COMPLIANT RoHS&REACh HALOGENFREE

SIZE A4

Size: 3022

This electronic component has been designed and developed for usage in general electronic equipment only. This product is not authorized for use in equipment where a higher safety standard and reliability standard is especially required or where a failure of the product is reasonably expected to cause severe personal injury or death, unless the parties have executed an agreement specifically governing such use. Moreover Würth Elektronik eiSos GmbH & Co KG products are neither designed nor intended for use in areas such as military, aerospace, aviation, nuclear control, submarine, transportation (automotive control, train control, ship control), transportation signal, disaster prevention, medical, public information network etc.. Würth Elektronik eiSos GmbH & Co KG must be informed about the intent of such usage before the design-in stage. In addition, sufficient reliability evaluation checks for safety must be performed on every electronic component which is used in electrical circuits that require high safety and reliability functions or performance.

H Soldering Specifications:

H1: Classification Reflow Profile for SMT components:

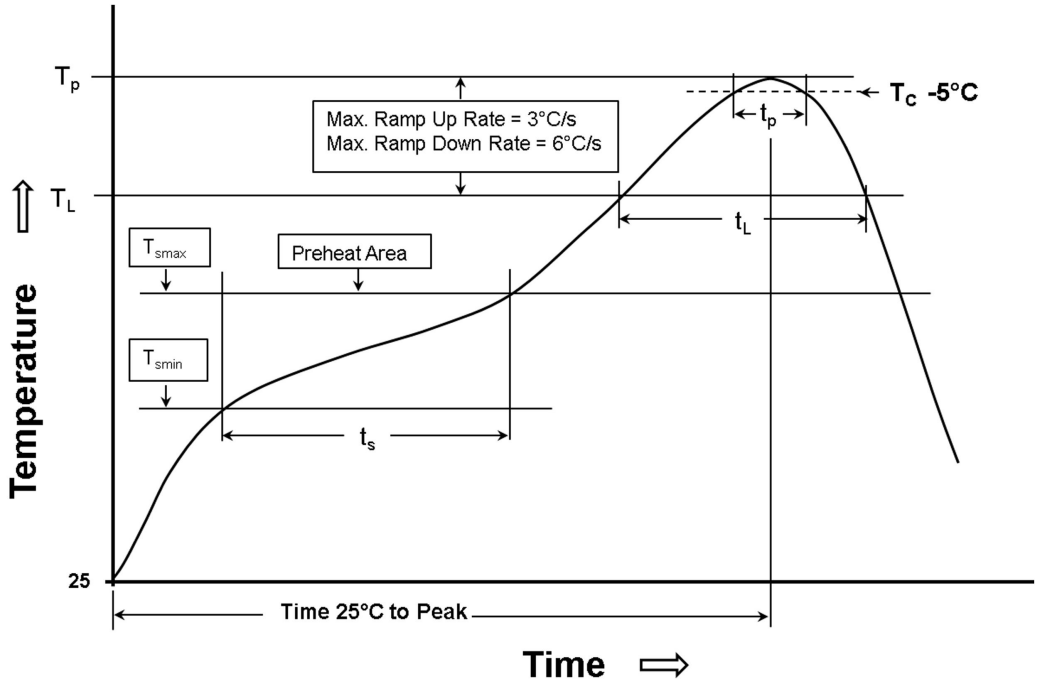

H2: Classification Reflow Profile:

Profile Feature	Pb-Free Assembly
Preheat - Temperature Min (T_{smin}) - Temperature Max (T_{smax}) - Time (t_s) from (T_{smin} to T_{smax})	 150°C 200°C 120 seconds max.
Ramp-up rate (T_L to T_P)	3°C/ second max.
Liquidous temperature (T_L) Time (t_L) maintained above T_L	217°C 60 seconds max.
Peak package body temperature (T_p)	250°C max.
Time within 5°C of actual peak temperature (t_p)	10 seconds max.
Ramp-down rate (T_P to T_L)	6°C/ second max.
Time 25°C to peak temperature	220 seconds max.
Applied cycles	2 cycles max.

REV	DATE	BY	CHECKED
1.1	2014-06-03	SSt	PLD
1.0	2014-01-30	SSt	PLD

Projection

Würth Elektronik eiSos GmbH & Co. KG
EMC & Inductive Solutions
Max-Eyth-Str. 1
74638 Waldenburg
Germany
Tel. +49 (0) 79 42 945 - 0
www.we-online.com
eiSos@we-online.com

DESCRIPTION

WL-SWTP SMD White Top View PLCC LED

Order.- No.

158302227

COMPLIANT RoHS&REACh HALOGENFREE

SIZE A4

Size: 3022

This electronic component has been designed and developed for usage in general electronic equipment only. This product is not authorized for use in equipment where a higher safety standard and reliability standard is especially required or where a failure of the product is reasonably expected to cause severe personal injury or death, unless the parties have executed an agreement specifically governing such use. Moreover Würth Elektronik eiSos GmbH & Co KG products are neither designed nor intended for use in areas such as military, aerospace, aviation, nuclear control, submarine, transportation (automotive control, train control, ship control), transportation signal, disaster prevention, medical, public information network etc.. Würth Elektronik eiSos GmbH & Co KG must be informed about the intent of such usage before the design-in stage. In addition, sufficient reliability evaluation checks for safety must be performed on every electronic component which is used in electrical circuits that require high safety and reliability functions or performance.

I Cautions and Warnings:

The following conditions apply to all goods within the product series of WL-SWTP of Würth Elektronik eiSos GmbH & Co. KG:

General:
All recommendations according to the general technical specifications of the data sheet have to be complied with.

The usage and operation of the product within ambient conditions, which probably alloy or harm the component surface, has to be avoided.

If the product is potted in customer applications, the potting material might shrink during and after hardening. The product is exposed to the pressure of the potting material with the effect that the LED body, pins or termination is possibly damaged by this pressure and so the electrical as well as the mechanical characteristics are endangered to be affected. After the potting material is cured, the LED body, pins or termination of the product have to be checked if any reduced electrical or mechanical functions or destructions have occurred.

The responsibility for the applicability of customer specific products and use in a particular customer design is always within the authority of the customer. All technical specifications for standard products do also apply to customer specific products.

Washing varnish agent that is used during the production to clean the customer application might damage or change the characteristics of the LED body, pins or termination. The washing varnish agent could have a negative effect on the long term function of the product.

Direct mechanical impact to the product shall be prevented as the material of the LED body, pins or termination could flake or in the worst case it could break.

The standard deliveries include values in the range and limitation as defined in the Electrical & Optical Properties specified in the datasheet. On each reel, only one bin is sorted and taped. The bin is defined on intensity, chromaticity coordinate or wavelength and forward voltage. In order to ensure highest availability, the reel binning of standard deliveries can vary. A single bin cannot be ordered. Please contact us in advance, if you need a particular bin sorting before placing your order to clarify the lead time, MOQ and pricing.

Product specific:
Follow all instructions mentioned in the data sheet, especially:

- The soldering profile has to be complied with according to the technical reflow/ or wave soldering specification, otherwise this will void the warranty.
- All products shall be used before the end of the period of 12 months based on the product date code, if not a 100% solderability can´t be guaranteed.
- Violation of the technical product specifications such as exceeding the absolute maximum ratings will void the warranty.
- It is also recommended to return the LEDs to the original moisture proof bag and reseal the moisture proof bag again.
- Certain LED surfaces consist of soft material. Pressure on the top surface has to be handeled carefully to prevent negative influence to the function and reliability of the LEDs.
- ESD prevention methods need to be applicated for manual handling and processing by machinery.
- Resistors for protection are obligatory.
- Luminaires in operation could harm human vision or skin on a photo-biological level, therefore direct light impact has to be avoided. All products are additionally certified as risk groups 0 to 2 according to DIN EN 62471:2008

REV	DATE	BY	CHECKED
1.1	2014-06-03	SSt	PLD
1.0	2014-01-30	SSt	PLD

Projection

Würth Elektronik eiSos GmbH & Co. KG
EMC & Inductive Solutions
Max-Eyth-Str. 1
74638 Waldenburg
Germany
Tel. +49 (0) 79 42 945 - 0
www.we-online.com
eiSos@we-online.com

DESCRIPTION

WL-SWTP SMD White Top View PLCC LED

Order.- No.

158302227

COMPLIANT RoHS&REACh HALOGENFREE

SIZE A4

Size: 3022

This electronic component has been designed and developed for usage in general electronic equipment only. This product is not authorized for use in equipment where a higher safety standard and reliability standard is especially required or where a failure of the product is reasonably expected to cause severe personal injury or death, unless the parties have executed an agreement specifically governing such use. Moreover Würth Elektronik eiSos GmbH & Co KG products are neither designed nor intended for use in areas such as military, aerospace, aviation, nuclear control, submarine, transportation (automotive control, train control, ship control), transportation signal, disaster prevention, medical, public information network etc.. Würth Elektronik eiSos GmbH & Co KG must be informed about the intent of such usage before the design-in stage. In addition, sufficient reliability evaluation checks for safety must be performed on every electronic component which is used in electrical circuits that require high safety and reliability functions or performance.

J Important Notes:

The following conditions apply to all goods within the product range of Würth Elektronik eiSos GmbH & Co. KG:

1. General Customer Responsibility
Some goods within the product range of Würth Elektronik eiSos GmbH & Co. KG contain statements regarding general suitability for certain application areas. These statements about suitability are based on our knowledge and experience of typical requirements concerning the areas, serve as general guidance and cannot be estimated as binding statements about the suitability for a customer application. The responsibility for the applicability and use in a particular customer design is always solely within the authority of the customer. Due to this fact it is up to the customer to evaluate, where appropriate to investigate and decide whether the device with the specific product characteristics described in the product specification is valid and suitable for the respective customer application or not.

2. Customer Responsibility related to Specific, in particular Safety-Relevant Applications
It has to be clearly pointed out that the possibility of a malfunction of electronic components or failure before the end of the usual lifetime cannot be completely eliminated in the current state of the art, even if the products are operated within the range of the specifications.

In certain customer applications requiring a very high level of safety and especially in customer applications in which the malfunction or failure of an electronic component could endanger human life or health it must be ensured by most advanced technological aid of suitable design of the customer application that no injury or damage is caused to third parties in the event of malfunction or failure of an electronic component.

Therefore, customer is cautioned to verify that data sheets are current before placing orders. The current data sheets can be downloaded at www.we-online.com.

3. Best Care and Attention
Any product-specific notes, cautions and warnings must be strictly observed. Any disregard will result in the loss of warranty.

4. Customer Support for Product Specifications
Some products within the product range may contain substances which are subject to restrictions in certain jurisdictions in order to serve specific technical requirements. Necessary information is available on request. In this case the field sales engineer or the internal sales person in charge should be contacted who will be happy to support in this matter.

5. Product R&D
Due to constant product improvement product specifications may change from time to time. As a standard reporting procedure of the Product Change Notification (PCN) according to the JEDEC-Standard inform about minor and major changes. In case of further queries regarding the PCN, the field sales engineer or the internal sales person in charge should be contacted. The basic responsibility of the customer as per Section 1 and 2 remains unaffected.

6. Product Life Cycle
Due to technical progress and economical evaluation we also reserve the right to discontinue production and delivery of products. As a standard reporting procedure of the Product Termination Notification (PTN) according to the JEDEC-Standard we will inform at an early stage about inevitable product discontinuance. According to this we cannot guarantee that all products within our product range will always be available. Therefore it needs to be verified with the field sales engineer or the internal sales person in charge about the current product availability expectancy before or when the product for application design-in disposal is considered.
The approach named above does not apply in the case of individual agreements deviating from the foregoing for customer-specific products.

7. Property Rights
All the rights for contractual products produced by Würth Elektronik eiSos GmbH & Co. KG on the basis of ideas, development contracts as well as models or templates that are subject to copyright, patent or commercial protection supplied to the customer will remain with Würth Elektronik eiSos GmbH & Co. KG.

Würth Elektronik eiSos GmbH & Co. KG does not warrant or represent that any license, either expressed or implied, is granted under any patent right, copyright, mask work right, or other intellectual property right relating to any combination, application, or process in which Würth Elektronik eiSos GmbH & Co. KG components or services are used.

8. General Terms and Conditions
Unless otherwise agreed in individual contracts, all orders are subject to the current version of the “General Terms and Conditions of Würth Elektronik eiSos Group”, last version available at www.we-online.com.

REV	DATE	BY	CHECKED
1.1	2014-06-03	SSt	PLD
1.0	2014-01-30	SSt	PLD

Projection

Würth Elektronik eiSos GmbH & Co. KG
EMC & Inductive Solutions
Max-Eyth-Str. 1
74638 Waldenburg
Germany
Tel. +49 (0) 79 42 945 - 0
www.we-online.com
eiSos@we-online.com

DESCRIPTION

WL-SWTP SMD White Top View PLCC LED

Order.- No.

158302227

COMPLIANT RoHS&REACh HALOGENFREE

SIZE A4

Size: 3022

This electronic component has been designed and developed for usage in general electronic equipment only. This product is not authorized for use in equipment where a higher safety standard and reliability standard is especially required or where a failure of the product is reasonably expected to cause severe personal injury or death, unless the parties have executed an agreement specifically governing such use. Moreover Würth Elektronik eiSos GmbH & Co KG products are neither designed nor intended for use in areas such as military, aerospace, aviation, nuclear control, submarine, transportation (automotive control, train control, ship control), transportation signal, disaster prevention, medical, public information network etc.. Würth Elektronik eiSos GmbH & Co KG must be informed about the intent of such usage before the design-in stage. In addition, sufficient reliability evaluation checks for safety must be performed on every electronic component which is used in electrical circuits that require high safety and reliability functions or performance.