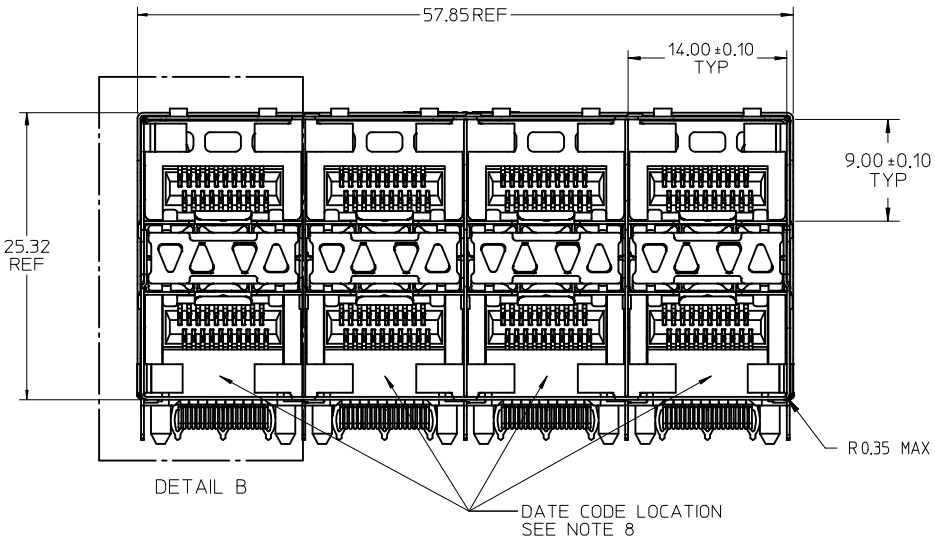

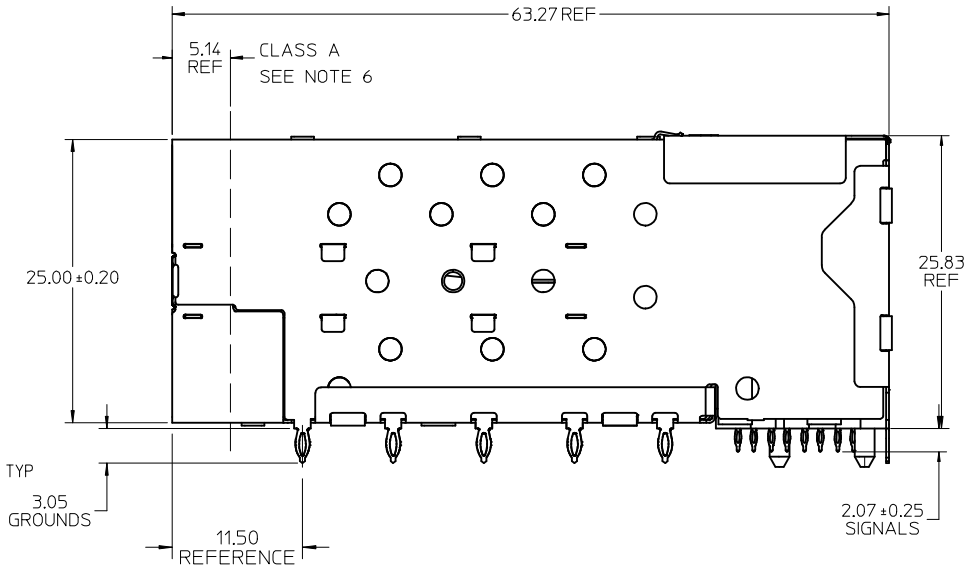

NOTES

1. MATERIAL:
   - CAGE: NICKEL SILVER, THICKNESS: 0.25mm
   - CONNECTOR HOUSING: GLASS FILLED LIQUID CRYSTAL POLYMER (LCP), UL 94V-0, COLOR: BLACK
   - OVERMOLD TERMINAL HOUSING: GLASS FILLED LIQUID CRYSTAL POLYMER (LCP), UL 94V-0, COLOR: BLACK
   - TERMINALS: TIN BRASS
   - LIGHTPIPE HOUSING: ZINC
   - LIGHTPIPES: POLYCARBONATE, COLOR: CLEAR
2. FINISHES:
   - TERMINALS: CONTACT AREA: 0.76 MICROMETERS MINIMUM HARD GOLD OVER 1.27 MICROMETERS MINIMUM NICKEL.
   - COMPLIANT TAIL: 0.76 TO 1.52 MICROMETERS MATTE TIN OVER 0.76 MICROMETERS MINIMUM NICKEL.
   - LIGHTPIPE HOUSING: 80 MICROMETERS MINIMUM NICKEL OVER COPPER
3. REFER TO PS-75310-001 PRODUCT SPEC FOR ALL ELECTRICAL, MECHANICAL AND ENVIRONMENTAL SPECIFICATIONS.
4. LIGHT PIPE PAD LAYOUT IS FOR 0805 LOW-PROFILE LED PACKAGE, FOR OTHER RECOMMENDED LAYOUTS REFER TO MOLEX'S REPORT TS-75310-001.
5. REFER TO PK-75450-001 FOR ALL PACKAGING SPECIFICATIONS.
6. ALL EXTERIOR SURFACES TO BE CLASS "B" SURFACE EXCEPT THE UNDER SIDE OF THE CAGE (CLASS "C") WHERE THE PCB WOULD BE LOCATED AND AS OTHERWISE NOTED.
   THE SURFACES TO CONFORM TO THE MOLEX COSMETIC DOC PS-45499-002.
7. REFER TO AS-76090-001 FOR HIGH SPEED ROUTING RECOMMENDATIONS.
8. DATE CODE LOCATION IS SHOWN ABOVE.
   DATE CODE FORMAT: DDDY MX A1
   - DDD = DAY OF THE YEAR
   - Y = YEAR
   - MX = MOLEX
   - A = ALPHA CHARACTER - INDICATES MANUFACTURING LINE
   - 1 = NUMERIC CHARACTER - INDICATES PRODUCTION SHIFT

PART NUMBER	LIGHT PIPE CONFIGURATION - SEE SHEET 2	CAGE PLATING
76046-5901	4 LIGHT PORTS	NONE
	INNER 2 PORTS	NONE
	OUTER 2 PORTS	NONE

INITIAL RELEASE
EC NO: UCP2014-0581 2013/08/06
DRWN:BBARKER
CH'KD:
APPR:SMILLER 2013/12/20
DESCRIPTION
REV A

QUALITY SYMBOLS
E =0
E =0
E =0

GENERAL TOLERANCES (UNLESS SPECIFIED)

	mm	INCH
4 PLACES	± ---	± ---
3 PLACES	± ---	± ---
2 PLACES	± 0.13	± ---
1 PLACE	± 0.25	± ---
0 PLACE	±	±

ANGULAR ± 5 °
DRAFT WHERE APPLICABLE MUST REMAIN WITHIN DIMENSIONS

DIMENSION STYLE: MM ONLY
SCALE: 3:1
DESIGN UNITS: METRIC
THIRD ANGLE PROJECTION

DRAWN BY: BBARKER DATE: 2013/08/06
CHECKED BY: TIBARRA DATE: 2013/08/08
APPROVED BY: SMILLER DATE: 2013/12/20
MATERIAL NO.: SEE TABLE

TITLE: STACKED SFP+ 2X4 ASS'Y NO GASKET/FLANGE WITH LIGHTPIPES
molex
DOCUMENT NO.: RSD-76046-5900
SHEET NO.: 1 OF 4
SIZE: C

THIS DRAWING CONTAINS INFORMATION THAT IS PROPRIETARY TO MOLEX INCORPORATED AND SHOULD NOT BE USED WITHOUT WRITTEN PERMISSION

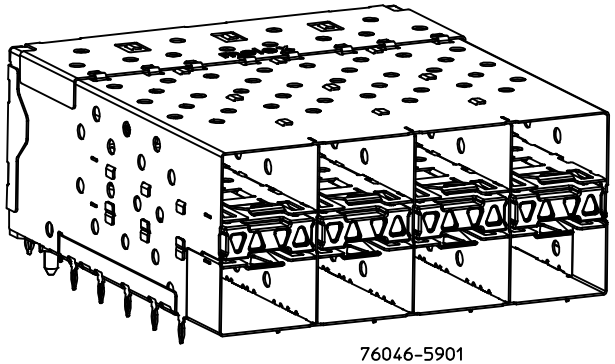

76046-5901
WITH INNER & OUTER LIGHTPIPE PORTS

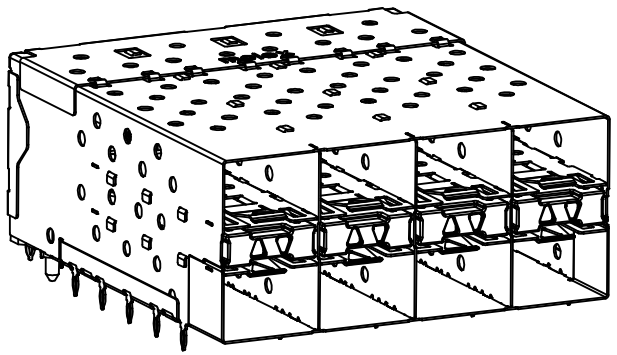

WITH INNER LIGHTPIPE PORTS

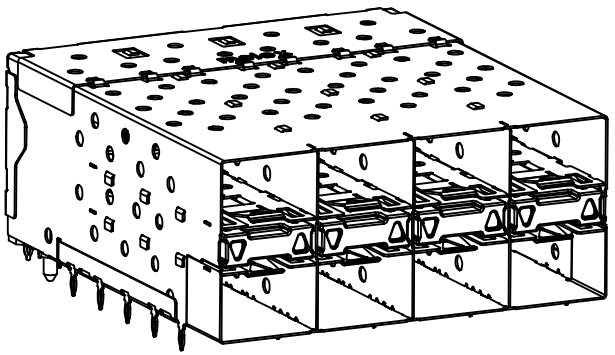

WITH OUTER LIGHTPIPE PORTS

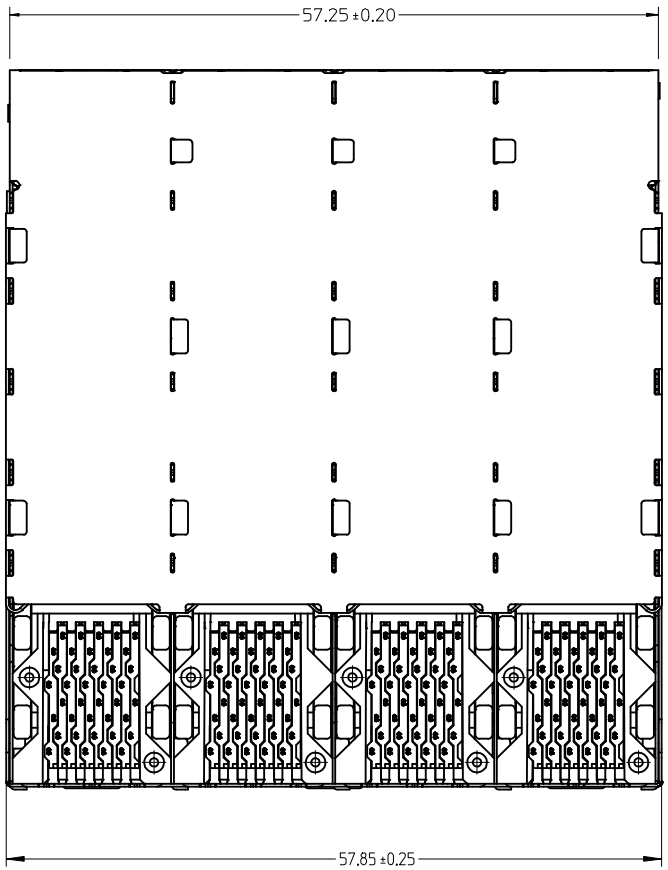

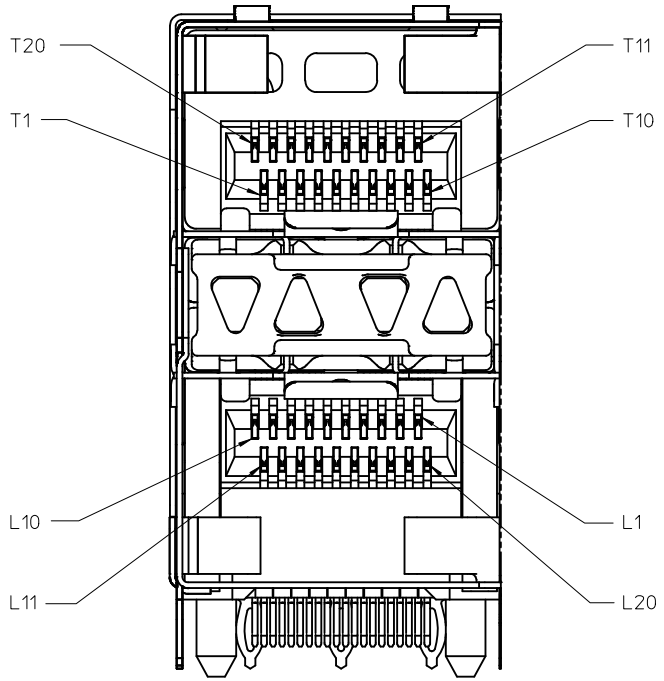

DETAIL B SCALE 6:1
CIRCUIT NUMBERING AND LIGHTPIPE IDENTIFICATION

SEE SHEET 1
EC NO: UCP2014-0581 2013/08/06
DRWN:BBARKER
CH'KD:
APPR:SMILLER 2013/12/20
DESCRIPTION
A
REV

QUALITY SYMBOLS

GENERAL TOLERANCES (UNLESS SPECIFIED)

	mm	INCH
4 PLACES	± ---	± ---
3 PLACES	± ---	± ---
2 PLACES	± 0.13	± ---
1 PLACE	± 0.25	± ---
0 PLACE	±	±

ANGULAR ± 5 °

DRAFT WHERE APPLICABLE MUST REMAIN WITHIN DIMENSIONS

DIMENSION STYLE: MM ONLY
SCALE: 3:1
DESIGN UNITS: METRIC
THIRD ANGLE PROJECTION

		DATE
DRAWN BY	BBARKER	2013/08/06
CHECKED BY	TIBARRA	2013/08/08
APPROVED BY	SMILLER	2013/12/20

TITLE: STACKED SFP+ 2X4 ASS'Y NO GASKET/FLANGE WITH LIGHTPIPES

molex

MATERIAL NO.: SEE TBL, SHT 1
DOCUMENT NO.: RSD-76046-5900
SHEET NO.: 2 OF 4
SIZE: C

THIS DRAWING CONTAINS INFORMATION THAT IS PROPRIETARY TO MOLEX INCORPORATED AND SHOULD NOT BE USED WITHOUT WRITTEN PERMISSION

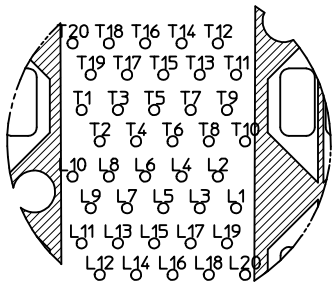

CIRCUIT NUMBERING
COMPONENT SIDE OF BOARD

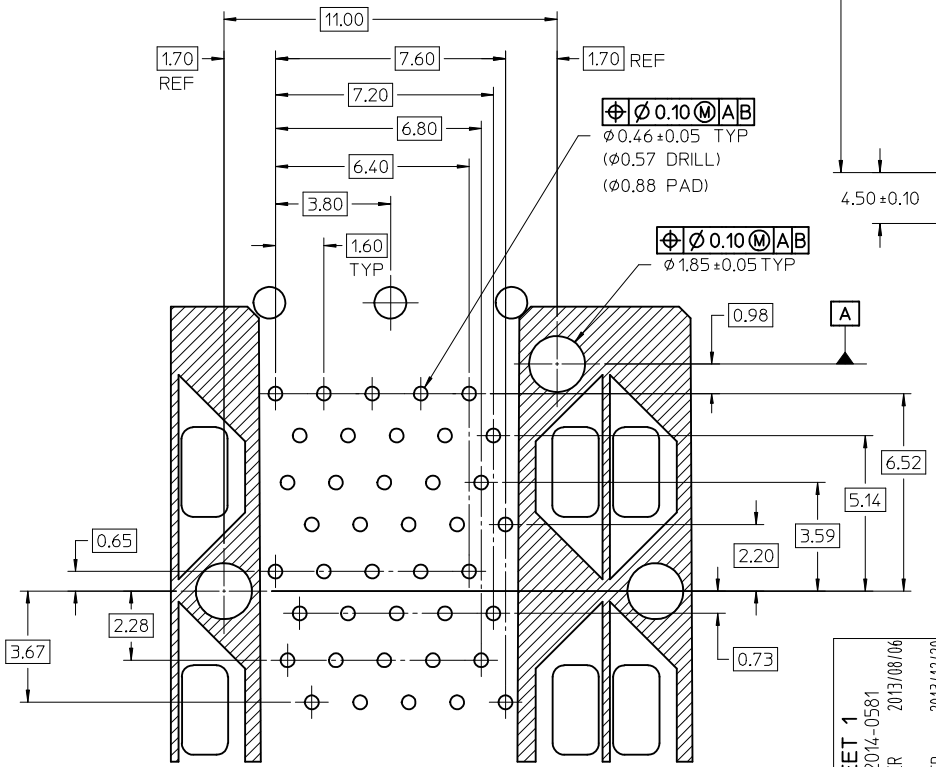

DETAIL A
SCALE 8:1

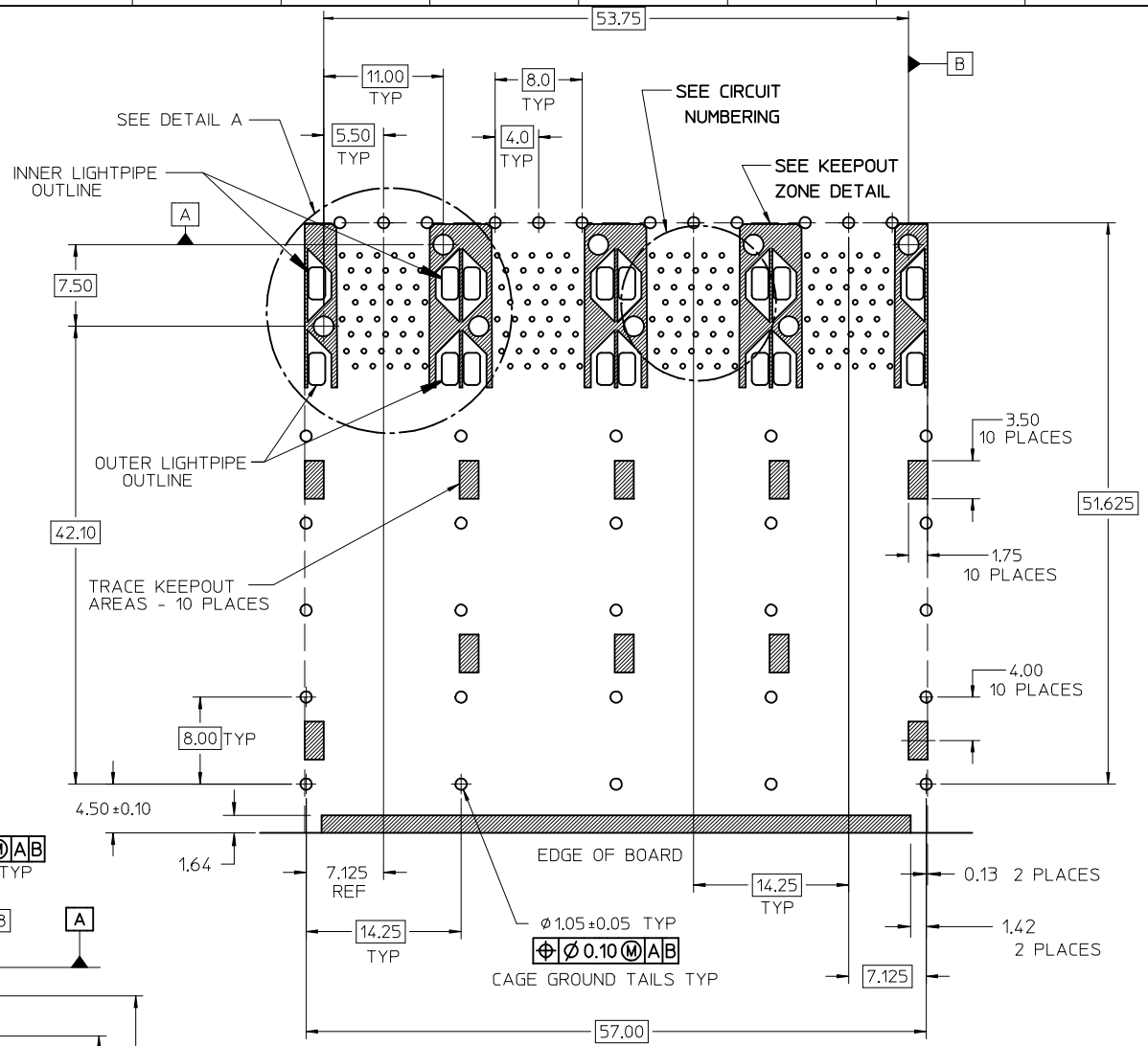

RECOMMENDED PCB LAYOUT - COMPONENT SIDE
MINIMUM PCB THICKNESS OF 1.57MM
THE ENTIRE AREA OF THE CONNECTOR FOOTPRINT
TO BE CONSIDERED THE KEEP OUT AREA INDICATED
BY THE DASHED LINE

SEE SHEET 1
EC NO: UCP2014-0581 2013/08/06
DRWN:BBARKER
CH'KD:
APPR:SMILLER 2013/12/20
DESCRIPTION
A
REV

QUALITY SYMBOLS
F =0
F =0
F =0

GENERAL TOLERANCES (UNLESS SPECIFIED)

	mm	INCH
4 PLACES	± ---	± ---
3 PLACES	± ---	± ---
2 PLACES	± 0.13	± ---
1 PLACE	± 0.25	± ---
0 PLACE	±	±

ANGULAR ± 5 °
DRAFT WHERE APPLICABLE MUST REMAIN WITHIN DIMENSIONS

DIMENSION STYLE: MM ONLY
SCALE: 3:1
DESIGN UNITS: METRIC
THIRD ANGLE PROJECTION

		DATE
DRAWN BY	BBARKER	2013/08/06
CHECKED BY	TIBARRA	2013/08/08
APPROVED BY	SMILLER	2013/12/20

TITLE: STACKED SFP+ 2X4 ASS'Y NO GASKET/FLANGE WITH LIGHTPIPES

molex

MATERIAL NO.: SEE TBL, SHT 1
DOCUMENT NO.: RSD-76046-5900
SHEET NO.: 3 OF 4
SIZE: C

THIS DRAWING CONTAINS INFORMATION THAT IS PROPRIETARY TO MOLEX INCORPORATED AND SHOULD NOT BE USED WITHOUT WRITTEN PERMISSION

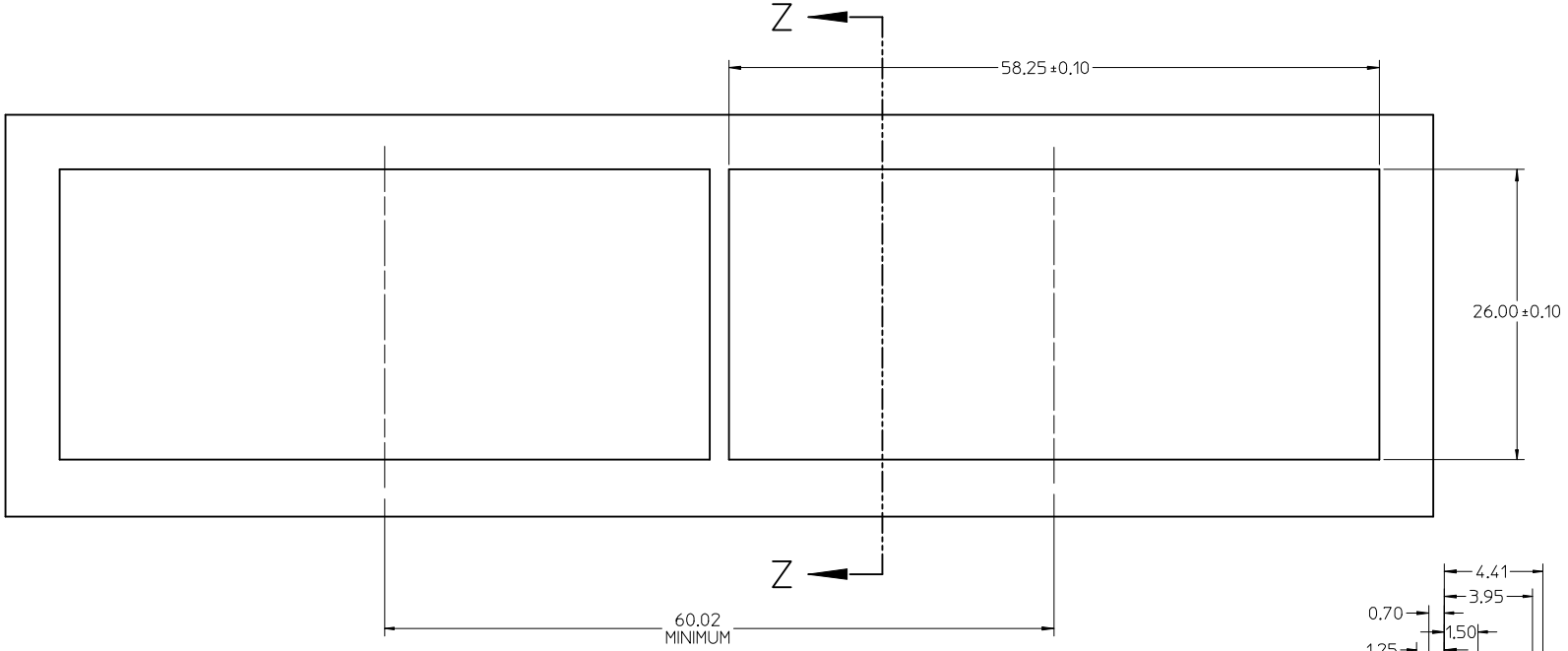

BEZEL CUTOUT CENTER SPACING DETAIL
BEZEL THICKNESS 0.8-2.6

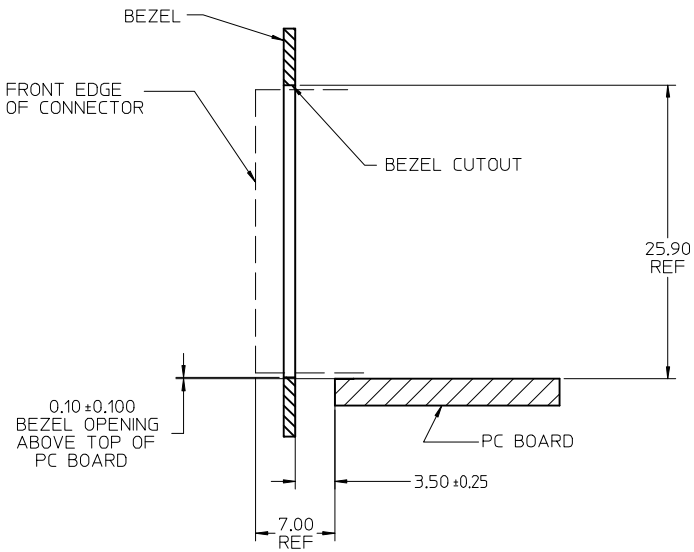

SECTION Z-Z

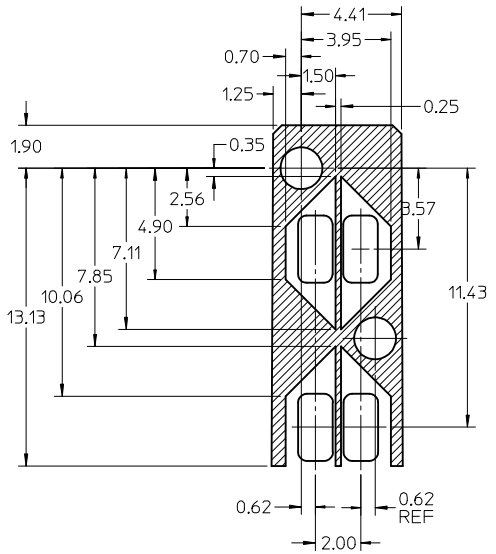

KEEP OUT ZONE DETAIL - LIGHTPIPE LOCATION AND OTHER ZONES
SCALE 6:1

SEE SHEET 1
EC NO: UCP2014-0581 2013/08/06
DRWN:BBARKER
CH'KD:
APPR:SMILLER 2013/12/20
DESCRIPTION
REV
A

QUALITY SYMBOLS
E =0
E =0
E =0

GENERAL TOLERANCES (UNLESS SPECIFIED)

	mm	INCH
4 PLACES	± ---	± ---
3 PLACES	± ---	± ---
2 PLACES	± 0.13	± ---
1 PLACE	± 0.25	± ---
0 PLACE	±	±

ANGULAR ± 5 °
DRAFT WHERE APPLICABLE MUST REMAIN WITHIN DIMENSIONS

DIMENSION STYLE: MM ONLY
SCALE: 3:1
DESIGN UNITS: METRIC
THIRD ANGLE PROJECTION

		DATE
DRAWN BY	BBARKER	2013/08/06
CHECKED BY	TIBARRA	2013/08/08
APPROVED BY	SMILLER	2013/12/20

TITLE: STACKED SFP+ 2X4 ASS'Y NO GASKET/FLANGE WITH LIGHTPIPES

molex

MATERIAL NO.: SEE TBL, SHT 1
DOCUMENT NO.: RSD-76046-5900
SHEET NO.: 4 OF 4
SIZE: C

THIS DRAWING CONTAINS INFORMATION THAT IS PROPRIETARY TO MOLEX INCORPORATED AND SHOULD NOT BE USED WITHOUT WRITTEN PERMISSION

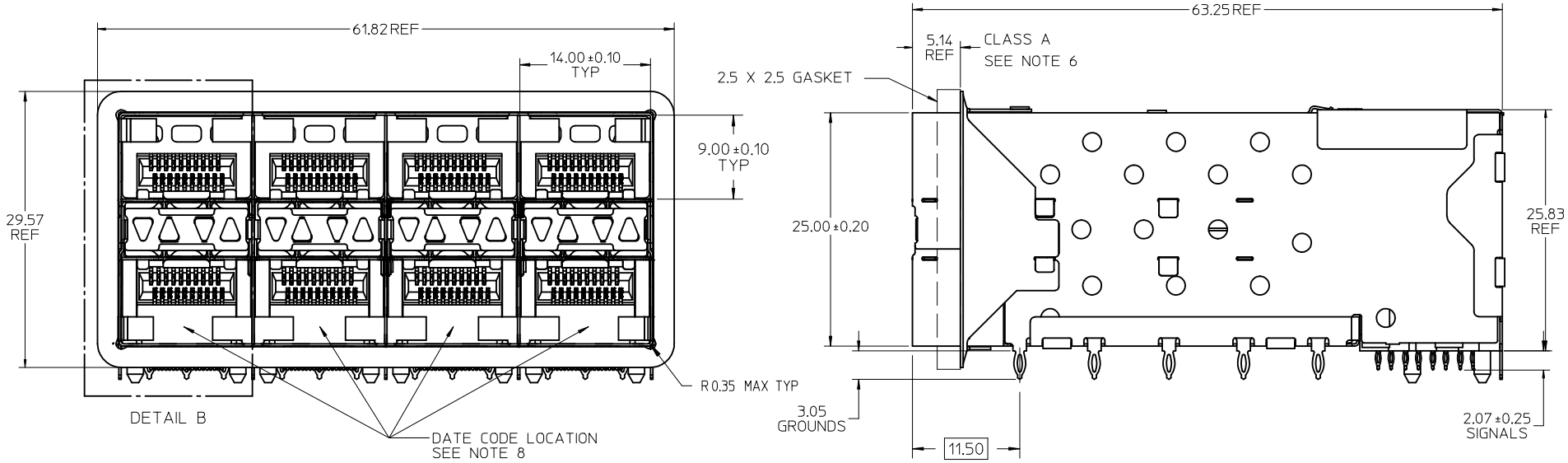

NOTES

1. MATERIAL:
   - CAGE: NICKEL SILVER, THICKNESS: 0.25mm
   - CONNECTOR HOUSING: GLASS FILLED LIQUID CRYSTAL POLYMER (LCP), UL 94V-0, COLOR: BLACK
   - OVERMOLD TERMINAL HOUSING: GLASS FILLED LIQUID CRYSTAL POLYMER (LCP), UL 94V-0, COLOR: BLACK
   - TERMINALS: TIN BRASS
   - EMI GASKET: CONDUCTIVE ELASTOMER
   - LIGHTPIPE HOUSING: ZINC
   - LIGHTPIPES: POLYCARBONATE, COLOR: CLEAR
2. FINISHES:
   - TERMINALS: CONTACT AREA: 0.76 MICROMETERS MINIMUM HARD GOLD OVER 1.27 MICROMETERS MINIMUM NICKEL.
   - COMPLIANT TAIL - MATTE TIN/LEAD OPTION: 0.76 TO 1.52 MICROMETERS 90/10 MATTE TIN-LEAD OVER 0.76 MICROMETERS MINIMUM NICKEL.
   - COMPLIANT TAIL - MATTE TIN OPTION: 0.76 TO 1.52 MICROMETERS MATTE TIN OVER 0.76 MICROMETERS MINIMUM NICKEL.
   - LIGHTPIPE HOUSING: 80 MICROMETERS MINIMUM NICKEL OVER COPPER
3. REFER TO PS-75310-001 PRODUCT SPEC FOR ALL ELECTRICAL, MECHANICAL AND ENVIRONMENTAL SPECIFICATIONS.
4. LIGHT PIPE PAD LAYOUT IS FOR 0805 LOW-PROFILE LED PACKAGE, FOR OTHER RECOMMENDED LAYOUTS REFER TO MOLEX'S REPORT TS-75310-001.
5. REFER TO PK-75450-001 FOR ALL PACKAGING SPECIFICATIONS.
6. ALL EXTERIOR SURFACES TO BE CLASS "B" SURFACE EXCEPT THE UNDER SIDE OF THE CAGE WHERE THE PCB WOULD BE LOCATED AND AS NOTED. THE SURFACES TO CONFORM TO THE MOLEX COSMETIC DOC PS-45499-002.
7. REFER TO AS-76090-001 FOR HIGH SPEED ROUTING RECOMMENDATIONS.
8. DATE CODE LOCATION IS SHOWN ABOVE.
   - DATE CODE FORMAT: DDDY MX A1
     - DDD = DAY OF THE YEAR
     - Y = YEAR
     - MX = MOLEX
     - A = ALPHA CHARACTER - INDICATES MANUFACTURING LINE
     - 1 = NUMERIC CHARACTER - INDICATES PRODUCTION SHIFT

PART NUMBER	DESCRIPTION	VIEW	COMPLIANT TAIL PLATING	CAGE PLATING
760920001	4 LIGHT PORTS	SEE PG 2	MATTE TIN / LEAD	N/A
760920002	INNER 2 PORTS	SEE PG 2	MATTE TIN / LEAD	N/A
760920003	OUTER 2 PORTS	SEE PG 2	MATTE TIN / LEAD	N/A
760925001	4 LIGHT PORTS	SEE PG 2	MATTE TIN	N/A
760925002	INNER 2 PORTS	SEE PG 2	MATTE TIN	N/A
760925003	OUTER 2 PORTS	SEE PG 2	MATTE TIN	N/A

REV	DESCRIPTION	DRWN:MWOLFE 2011/02/28 CH'KD:BBARKER 2011/02/28 APPR:SMILLER 2011/09/20
E	ADD NOTE 7 & 8 EC NO: UCP2011-2594	

QUALITY SYMBOLS: FV=0, FF=0, FP=0

GENERAL TOLERANCES (UNLESS SPECIFIED)

	mm	INCH
4 PLACES	± ---	± ---
3 PLACES	± ---	± ---
2 PLACES	± 0.13	± ---
1 PLACE	± 0.25	± ---
ANGULAR ± 5 °		

DRAFT WHERE APPLICABLE MUST REMAIN WITHIN DIMENSIONS

DIMENSION STYLE	MM ONLY
SCALE	3:1
DESIGN UNITS	METRIC
	THIRD ANGLE PROJECTION
DRAWN BY / DATE	JLONG 01-26-2007
CHECKED BY / DATE	MSANDBERG 01-26-2007
APPROVED BY / DATE	RNELSON 01-26-2007
MATERIAL NO.	SEE TABLE
TITLE	STACKED SFP+ 2X4 ASS'Y WITH ELASTOMERIC GASKET AND LIGHTPIPES
	MOLEX INCORPORATED
DOCUMENT NO.	SD-76092-001
SHEET NO.	1 OF 4
SIZE	C

THIS DRAWING CONTAINS INFORMATION THAT IS PROPRIETARY TO MOLEX INCORPORATED AND SHOULD NOT BE USED WITHOUT WRITTEN PERMISSION

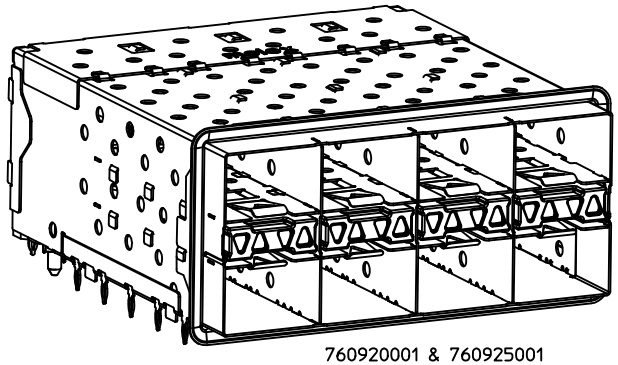

760920001 & 760925001
WITH INNER & OUTER LIGHTPIPE PORTS

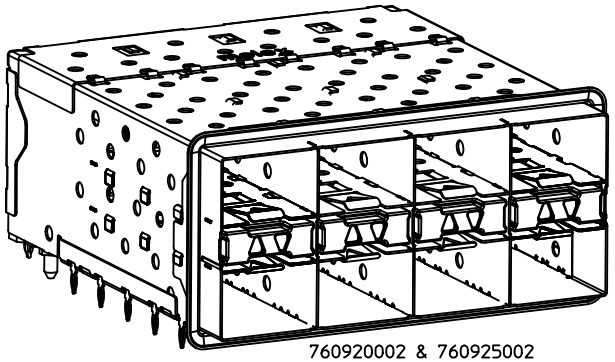

760920002 & 760925002
WITH INNER LIGHTPIPE PORTS

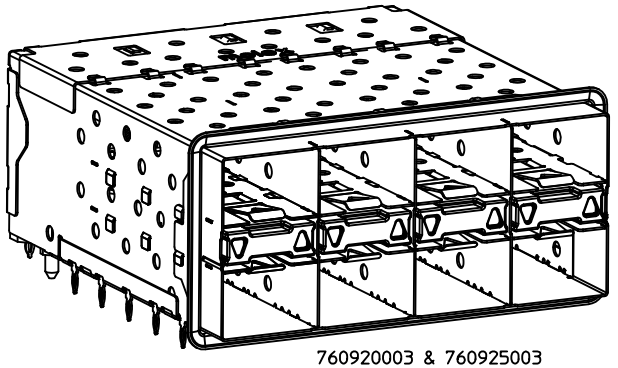

760920003 & 760925003
WITH OUTER LIGHTPIPE PORTS

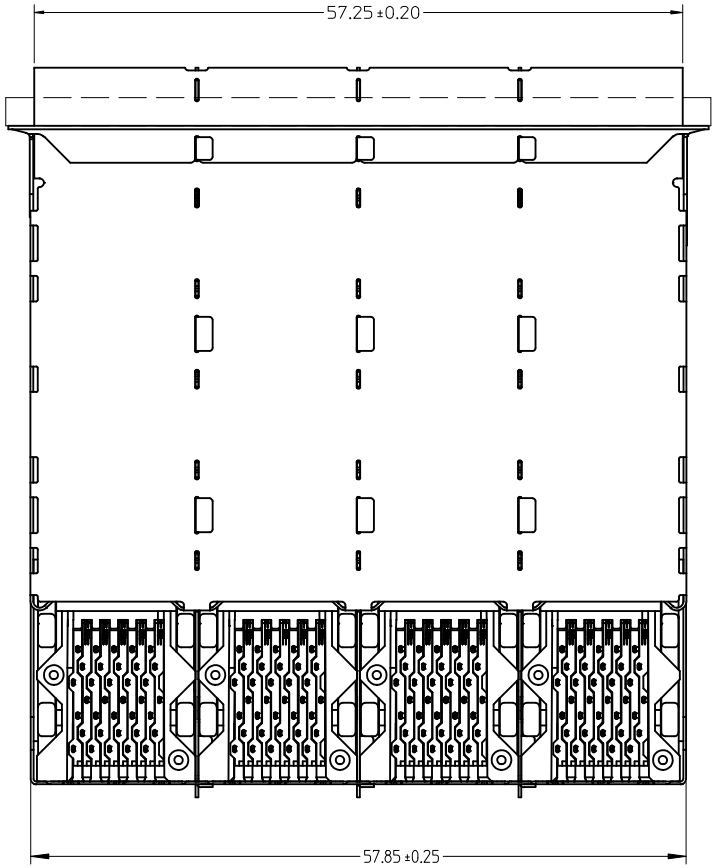

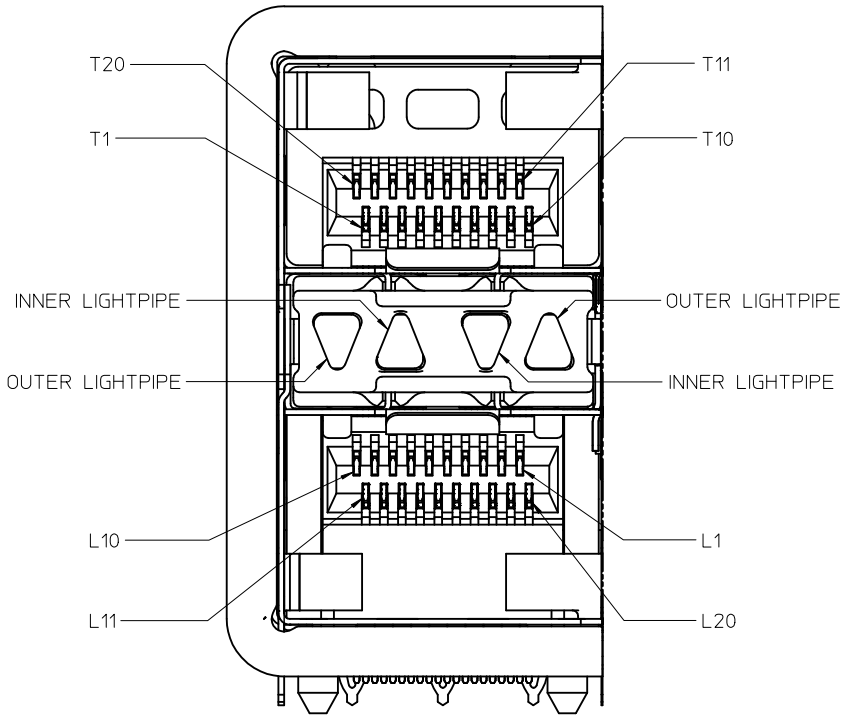

DETAIL B SCALE 6:1
CIRCUIT NUMBERING AND LIGHTPIPE IDENTIFICATION

ADD DETAIL B
EC NO: UCP2011-2594
DRWN:MWOLFE 2011/02/28
CH'KD:BBARKER 2011/02/28
APPR:SMILLER 2011/09/20
DESCRIPTION
REV

QUALITY SYMBOLS
=0
=0
=0

GENERAL TOLERANCES (UNLESS SPECIFIED)

	mm	INCH
4 PLACES	± ---	± ---
3 PLACES	± ---	± ---
2 PLACES	± 0.13	± ---
1 PLACE	± 0.25	± ---
ANGULAR ± 5 °		

DRAFT WHERE APPLICABLE MUST REMAIN WITHIN DIMENSIONS

DIMENSION STYLE: MM ONLY
SCALE: 3:1
DESIGN UNITS: METRIC
THIRD ANGLE PROJECTION

DRAWN BY	JLONG	DATE 01-26-2007
CHECKED BY	MSANDBERG	DATE 01-26-2007
APPROVED BY	RNELSON	DATE 01-26-2007

TITLE: STACKED SFP+ 2X4 ASS'Y WITH ELASTOMERIC GASKET AND LIGHTPIPES

molex MOLEX INCORPORATED

MATERIAL NO.: SEE TABLE
DOCUMENT NO.: SD-76092-001
SHEET NO.: 2 OF 4
SIZE: C

THIS DRAWING CONTAINS INFORMATION THAT IS PROPRIETARY TO MOLEX INCORPORATED AND SHOULD NOT BE USED WITHOUT WRITTEN PERMISSION

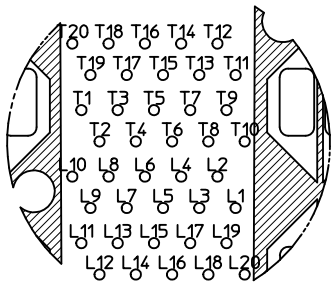

CIRCUIT NUMBERING
COMPONENT SIDE OF BOARD

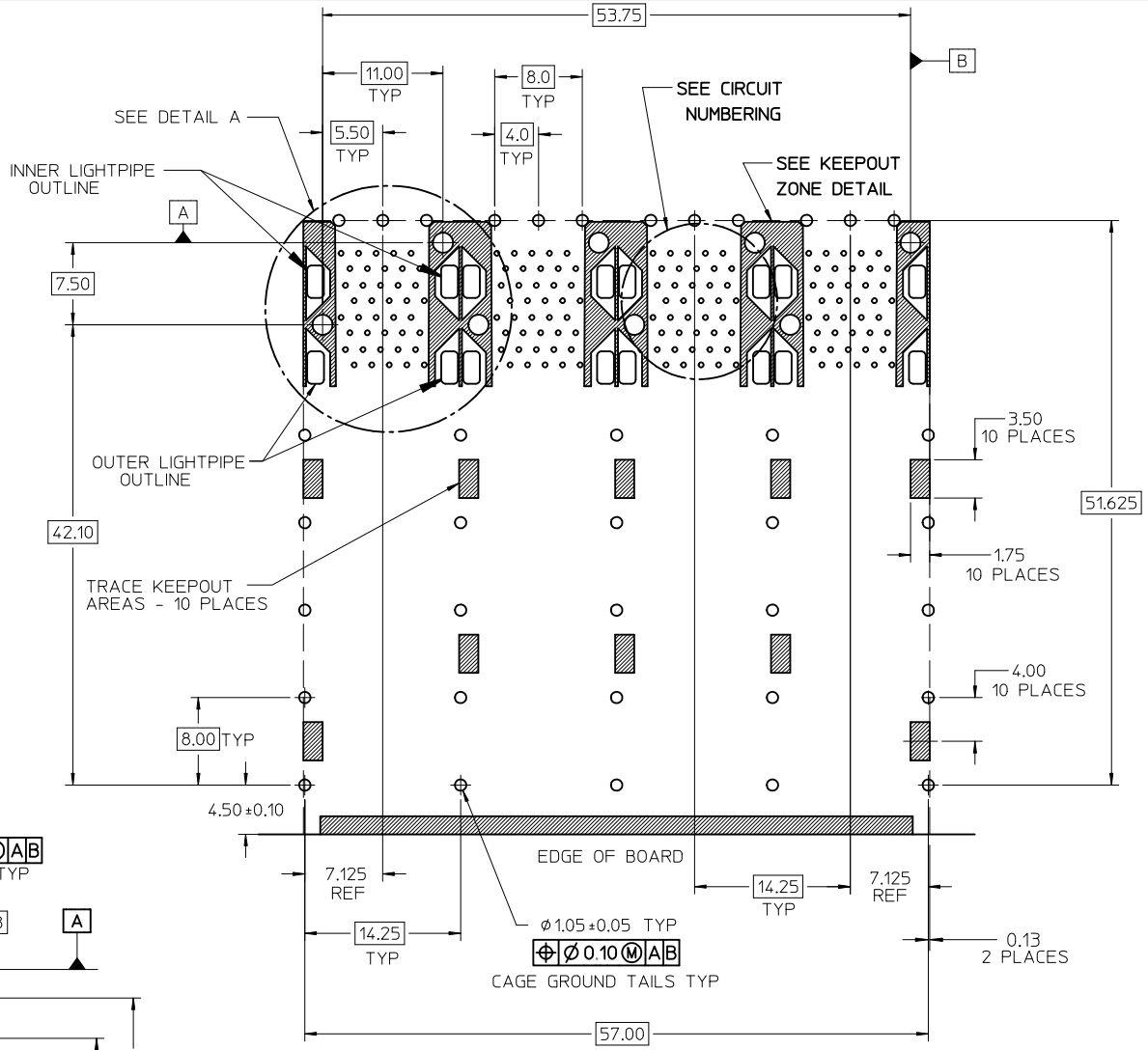

RECOMMENDED PCB LAYOUT - COMPONENT SIDE
MINIMUM PCB THICKNESS OF 1.57MM
THE ENTIRE AREA OF THE CONNECTOR FOOTPRINT
TO BE CONSIDERED THE KEEP OUT AREA INDICATED
BY THE DASHED LINE

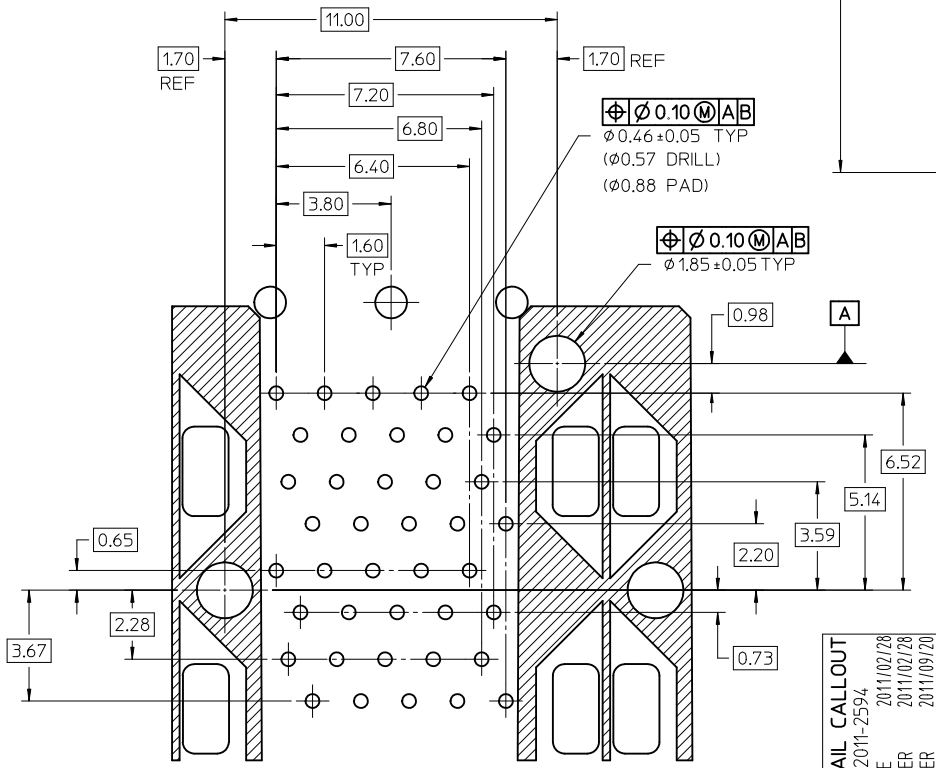

DETAIL A
SCALE 8:1

CHG DETAIL CALLOUT EC NO: UCP2011-2594 DRWN:MWOLFE 2011/02/28 CH'KD:BBARKER 2011/02/28 APPR:SMILLER 2011/09/20	QUALITY SYMBOLS =0 =0 =0	GENERAL TOLERANCES (UNLESS SPECIFIED)		DIMENSION STYLE MM ONLY	SCALE 3:1	DESIGN UNITS METRIC	THIRD ANGLE PROJECTION
			mm / INCH	DRAWN BY JLONG / DATE 01-26-2007	TITLE STACKED SFP+ 2X4 ASS'Y WITH ELASTOMERIC GASKET AND LIGHTPIPES		
		4 PLACES	± --- / ± ---	CHECKED BY MSANDBERG / DATE 01-26-2007			
		3 PLACES	± --- / ± ---	APPROVED BY RNELSON / DATE 01-26-2007	MOLEX INCORPORATED		
		2 PLACES	± 0.13 / ± ---				
		1 PLACE	± 0.25 / ± ---				
		ANGULAR ± 5 °					
		DRAFT WHERE APPLICABLE MUST REMAIN WITHIN DIMENSIONS		MATERIAL NO. SEE TABLE	DOCUMENT NO. SD-76092-001	SHEET NO. 3 OF 4	
E	REV			SIZE C	THIS DRAWING CONTAINS INFORMATION THAT IS PROPRIETARY TO MOLEX INCORPORATED AND SHOULD NOT BE USED WITHOUT WRITTEN PERMISSION		

tb_frame_C_P_AM_T
Rev. F 2009/06/18

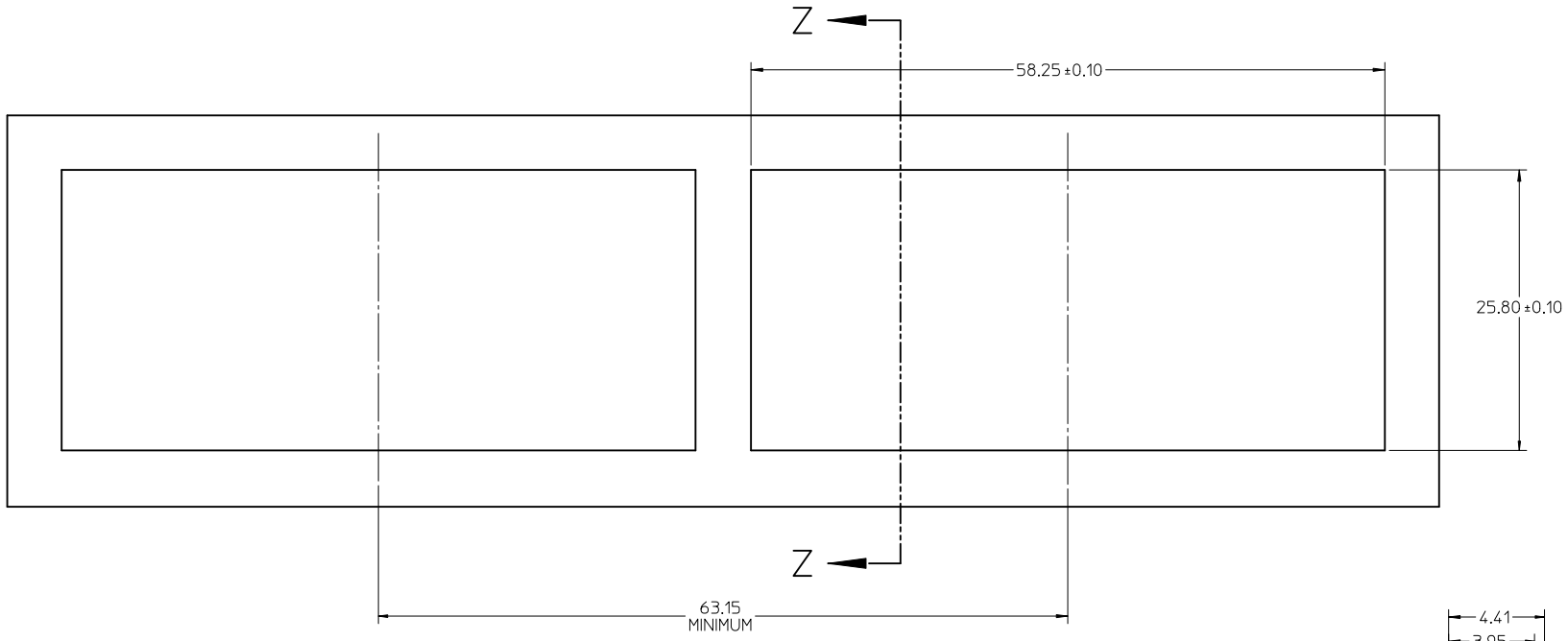

BEZEL CUTOUT CENTER SPACING DETAIL
BEZEL THICKNESS 0.8-2.6

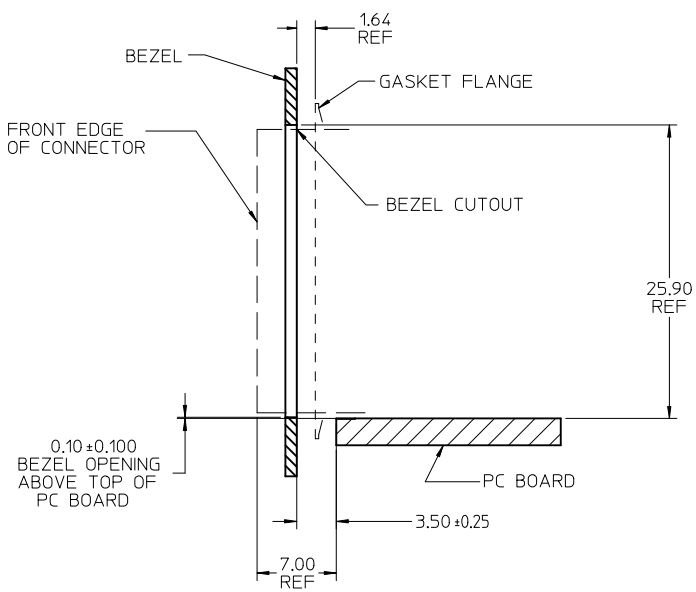

SECTION Z-Z

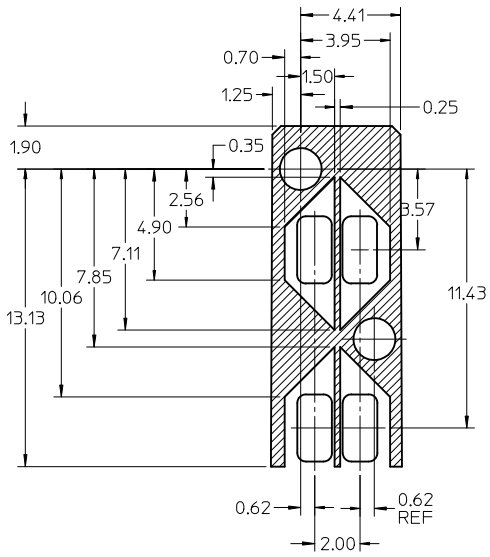

KEEP OUT ZONE DETAIL - LIGHTPIPE LOCATION AND OTHER ZONES
SCALE 6:1

DELETE MIDDLE BEZEL DIM
EC NO: UCP2011-2594 2011/02/28
DRWN:MWOLFE 2011/02/28
CH'KD:BBARKER 2011/09/20
APPR:SMILLER
DESCRIPTION
REV
E

QUALITY SYMBOLS

GENERAL TOLERANCES (UNLESS SPECIFIED)

	mm	INCH
4 PLACES	± ---	± ---
3 PLACES	± ---	± ---
2 PLACES	± 0.13	± ---
1 PLACE	± 0.25	± ---
ANGULAR ± 5 °		

DRAFT WHERE APPLICABLE MUST REMAIN WITHIN DIMENSIONS

DIMENSION STYLE: MM ONLY
SCALE: 3:1
DESIGN UNITS: METRIC
THIRD ANGLE PROJECTION

DRAWN BY	JLONG	DATE 01-26-2007
CHECKED BY	MSANDBERG	DATE 01-26-2007
APPROVED BY	RNELSON	DATE 01-26-2007

TITLE: STACKED SFP+ 2X4 ASS'Y WITH ELASTOMERIC GASKET AND LIGHTPIPES

MOLEX INCORPORATED

MATERIAL NO.: SEE TABLE
DOCUMENT NO.: SD-76092-001
SHEET NO.: 4 OF 4
SIZE: C

THIS DRAWING CONTAINS INFORMATION THAT IS PROPRIETARY TO MOLEX INCORPORATED AND SHOULD NOT BE USED WITHOUT WRITTEN PERMISSION