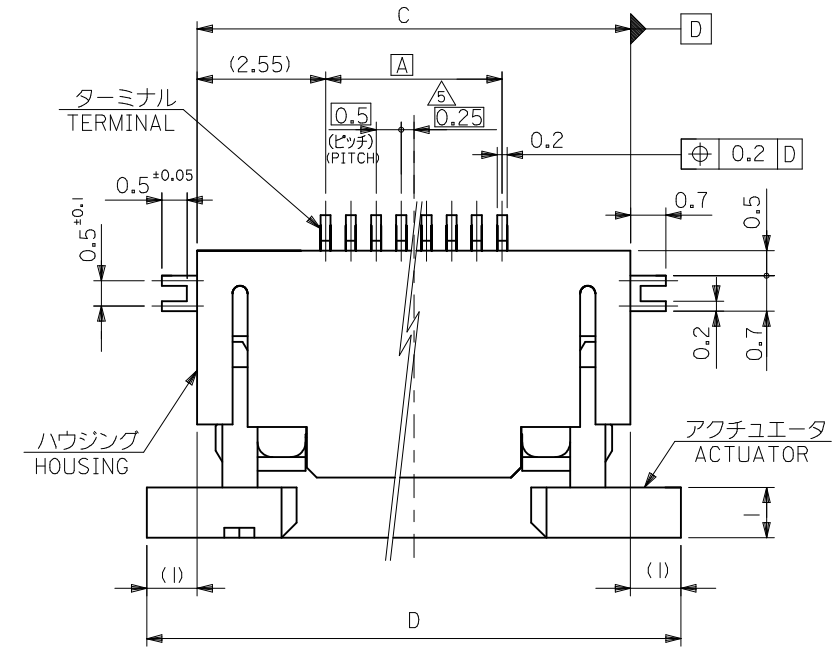

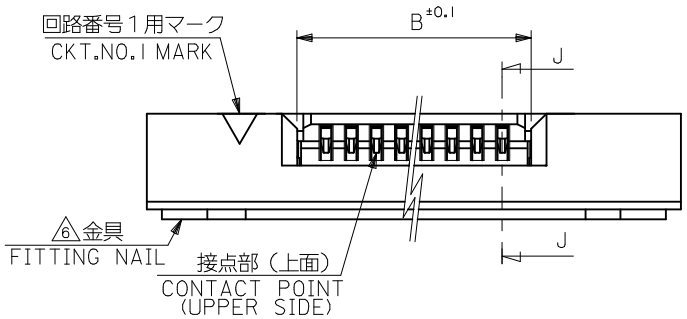

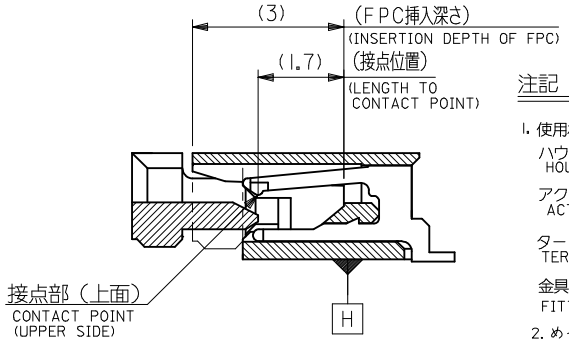

SECT.J-J

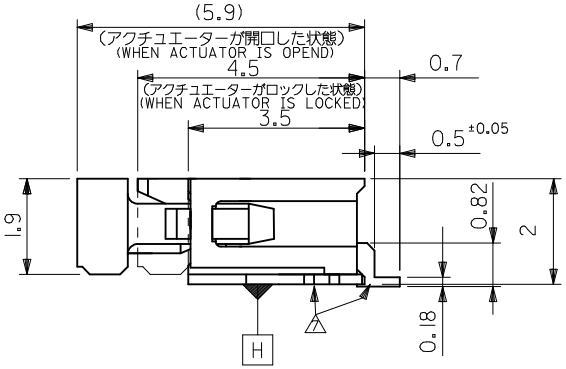

注記 NOTES

1. 使用材料：MATERIAL
   - ハウジング HOUSING ： ポリアミド(PA)、ナチュラル(白色)、ガラス充填、UL94V-0
     POLYAMIDE, NATURAL(WHITE), GLASS FILLED, UL94-V0
   - アクチュエータ ACTUATOR ： ポリフェニレンサルファイド(PPS)、黒色、ガラス充填、UL94V-0
     POLYPHENYRENE SULFID, BLACK ,GLASS FILLED, UL94V-0
   - ターミナル TERMINAL ：リン青銅（t＝0．2）
     PHOSPHOR BRONZE (t=0.2)
   - 金具 FITTING NAIL ：リン青銅（t＝0．2）
     PHOSPHOR BRONZE (t=0.2)
2. めっき仕様 PLATING
   - ターミナル TERMINAL
     錫銀ビスマスめっき(1.0μm以上)
     下地:ニッケルめっき(1.0μm以上)
     TIN SILVER BISMUTH PLATING (1.0 MICROMETER MINIMUM)
     UNDER PLATE : NICKEL PLATING (1.0 MICROMETER MINIMUM)
   - 金具
     錫めっき(1.0μm以上)
     下地:ニッケルめっき(1.0μm以上)
     TIN PLATING (1.0 MICROMETER MINIMUM)
     UNDER PLATE : NICKEL PLATING (1.0 MICROMETER MINIMUM)
3. R0．3は、FPCの導体部にかからないこと。
   R0.3 MUST NOT BE OVERLAPPED TO PATTERN OF FPC.
4. エンボステープ梱包時は、アクチュエータがロックした状態とする。
   IN THE PACKAGE,ACTUATOR OF PART NO.52435-**22 SHOULD BE LOCKED.
5. 偶数極に適用。
   APPLY FOR EVEN CIRCUIT.
6. パターンはくり止め用金具。
   FITTING NAIL FOR PREVENTION OF PEELING
   OF P.C.B. PATTERN.
7. ソルダーテール半田付け面のズレ量、および金具半田付け面のズレ量は、基準面 H に対し上方向 0.1MAXIMUM 、下方向 0.15MAXIMUM とし、相互のばらつきは0.1MAXIMUMとする．
   MISALIGNMENT OF SOLDER TAILS AND FITTING NAILS FROM H
   UPPER DIRECTION : 0.1MAXIMUM, LOWER DIRECTION : 0.15MAXIMUM OFFSET BETWEEN UPPER AND LOWER : 0.1MAXIMUM.
8. ELV及びRoHS適合品
   ELV AND RoHS COMPLIANT

CONNECTOR SERIES NO.	52435-**22

REVISED			
EC NO: J2014-0096	DRWN:AISHII	CH'KD:KTAKAHASHI	APPR:YNOGAWA
2013/07/18	2013/07/18	2013/08/19	DESCRIPTION
B			REV

GENERAL TOLERANCES (UNLESS SPECIFIED)

10 UNDER	±0.2
10 OVER 30 UNDER	±0.25
30 OVER	±0.3
ANGULAR ±3 °	

DRAFT WHERE APPLICABLE MUST REMAIN WITHIN DIMENSIONS

DIMENSION STYLE: MM ONLY	SCALE: ---	DESIGN UNITS: METRIC	THIRD ANGLE PROJECTION
DRAWN BY: NKONDO	DATE: 2012/09/10	TITLE: 0.5 FPC CONN ZIF R/A HOUSING ASSY (UPPER CONTAT)	
CHECKED BY: KTAKAHASHI	DATE: 2012/09/10		
APPROVED BY: KMORIKAWA	DATE: 2013/03/15	molex	
MATERIAL NO.: SEE CHART		DOCUMENT NO.: SD-52435-022	SHEET NO.: 1 OF 2
SIZE: A3	THIS DRAWING CONTAINS INFORMATION THAT IS PROPRIETARY TO MOLEX INCORPORATED AND SHOULD NOT BE USED WITHOUT WRITTEN PERMISSION		

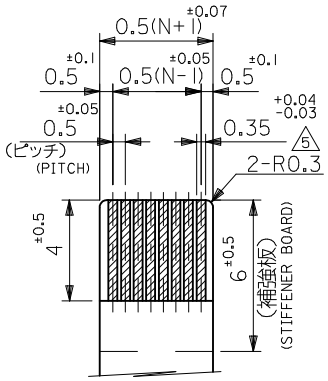

適合ＦＰＣ推奨寸法
APPLICABLE FPC
RECOMMENDED DIMENSION.
(仕上がり厚さ：$0.3^{\pm0.05}$)
(THICKNESS:$0.3^{\pm0.05}$)

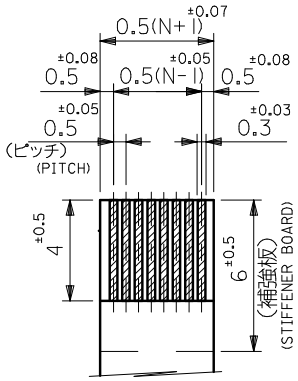

適合ＦＦＣ推奨寸法
APPLICABLE FFC
RECOMMENDED DIMENSION.
(仕上がり厚さ：$0.3^{\pm0.05}$)
(THICKNESS:$0.3^{\pm0.05}$)

FPCについて

補強フィルム材質はポリイミドを推奨します．ベースフィルムは25μmを推奨します．
接着剤は熱硬化接着剤を推奨します．
尚，接着剤の接点部への付着は導通不良の原因になりますので、染み出しが無い様、お願い致します

ABOUT FPC

RECOMMENDED STIFFENER MATERIAL: POLYIMIDE
RECOMMENDED BASE FILM THICKNESS: 25 MICROMETER
RECOMMENDED ADHESIVE: THERMOSETTING ADHESIVE
NOTE: PLEASE PUT APPROPRIATE AMOUNT OF ADHESIVE ON ADHEREND BECAUSE THERE IS A POSSIBILITY THAT THE EXTRA ADHESIVE CAUSES THE DEFECT IN ELECTRICAL CONTINUITY.

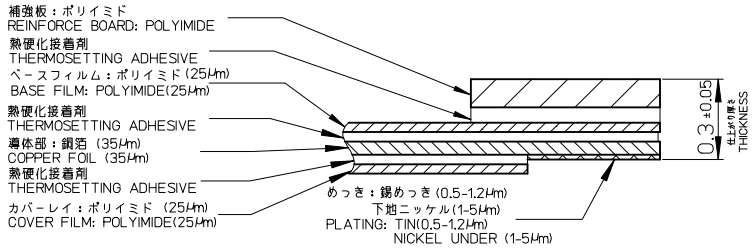

FPC構成推奨仕様
STRUCTURE OF FPC

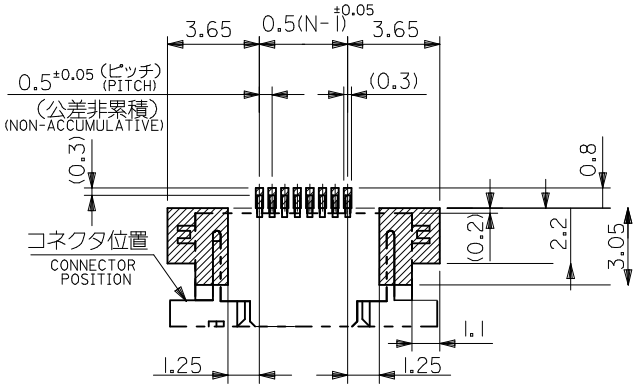

推奨基板レイアウト
（マウント面）
RECOMMENDED P.C.BOARD
PATTERN DIMENSION
(MOUNTING SIDE)

マスク厚 ： 100μm
マスク開口率 ： 100%
SCREEN THICKNESS : 100μm
SCREEN OPEN RATIO : 100%

21.6	19.6	15.65	14.5	52435-3033	30
21.1	19.1	15.15	14.0	-2933	29
20.6	18.6	14.65	13.5	-2833	28
20.1	18.1	14.15	13.0	-2733	27
19.6	17.6	13.65	12.5	-2633	26
19.1	17.1	13.15	12.0	-2533	25
18.6	16.6	12.65	11.5	-2433	24
18.1	16.1	12.15	11.0	-2333	23
17.6	15.6	11.65	10.5	-2233	22
17.1	15.1	11.15	10.0	-2133	21
D	C	B	(A)	オーダー番号 ORDER NO.	極数 CKT.

FPC/FFCについて

打ち抜き方向は導体側から補強板側を推奨します．
導体部については軟箔銅35μmまたは50μmを推奨します．

ABOUT FPC/FFC

RECOMMENDED PUNCHING DIRECTION: FROM CONDUCTOR SIDE TO STIFFENER SIDE
RECOMMENDED CONDUCTOR SPEC: SOFT COPPER FOIL
RECOMMENDED CONDUCTOR THICKNESS: 35 MICROMETER OR 50 MICROMETER

SEE SHEET 1 OF 2
EC NO: J2014-0096
DRWN:AISHII 2013/07/18
CH'KD:KTAKAHASHI 2013/07/18
APPR:YNOGAWA 2013/08/19
DESCRIPTION
REV B

GENERAL TOLERANCES (UNLESS SPECIFIED)

10 UNDER	±0.2
10 OVER 30 UNDER	±0.25
30 OVER	±0.3
ANGULAR ±3 °	

DRAFT WHERE APPLICABLE MUST REMAIN WITHIN DIMENSIONS

DIMENSION STYLE: MM ONLY
SCALE: ---
DESIGN UNITS: METRIC
THIRD ANGLE PROJECTION

DRAWN BY: NKONDO DATE: 2012/09/10
CHECKED BY: KTAKAHASHI DATE: 2012/09/10
APPROVED BY: KMORIKAWA DATE: 2013/03/15

TITLE: 0.5 FPC CONN ZIF R/A HOUSING ASSY (UPPER CONTAT)

molex

MATERIAL NO.: SEE CHART
DOCUMENT NO.: SD-52435-022
SHEET NO.: 2 OF 2
SIZE: A3

THIS DRAWING CONTAINS INFORMATION THAT IS PROPRIETARY TO MOLEX INCORPORATED AND SHOULD NOT BE USED WITHOUT WRITTEN PERMISSION

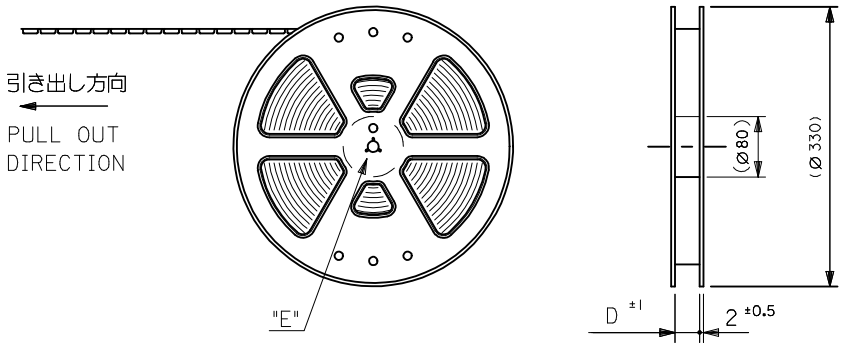

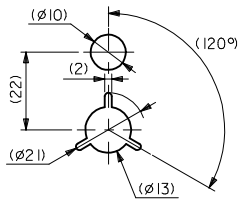

DETAIL "E"

注記 NOTES

1. 製品番号 52435-**22 の梱包状態はアクチュエータがロックした状態とする。
   詳細寸法については図面 RSD-52435-22 を参照下さい。
   IN THE PACKAGE,ACTUATOR OF PART NO.52435-**22 SHOULD BE LOCKED
   RE DETAILED DIMENSIONS,SEE RSD-52435-021
2. 梱包数量：1000個／リール
   NUMBER OF CONNECTORS:1000PCS/REEL
3. リードテープ長さ LEAD TAPE LENGTH

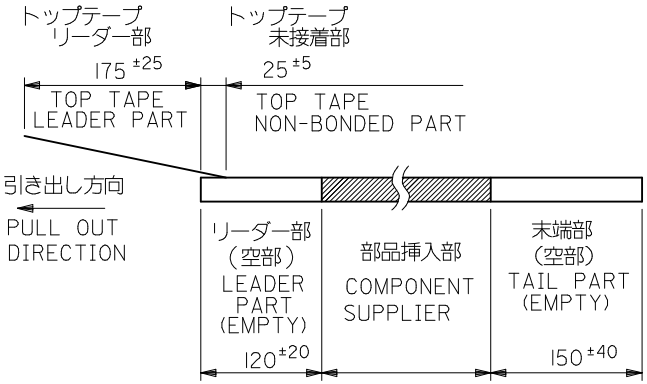

4. トップテープの剥離強度については、IEC60286-3 に準拠
   TOP TAPE PEEL FORCE IS DEFINED BY IEC60286-3.

5. 材料(MATERIAL)
   キャリアテープ(CARRIER TAPE):ポリプロピレン(POLYPROPYLENE)
   トップテープ (TOPTAPE):PET, PE, PEF
   リール(REEL): ポリスチレン (PS)〈リサイクル材を含む〉
   POLYSTYREN (PS) <RECYCLE MATERIAL CONTAINED>

6. ELV及びRoHS適合品
   ELV AND RoHS COMPLIANT

RELEASED	EC NO: J2013-1014	2012/09/10	
	DRWN:NKONDO	2012/09/10	
	CH'KD:KTAKAHASHI	2013/03/15	
	APPR:KMORIKAWA		
REV	0		DESCRIPTION

GENERAL TOLERANCES (UNLESS SPECIFIED)

10 UNDER	±0.2
10 OVER 30 UNDER	±0.25
30 OVER	±0.3
ANGULAR ±3 °	

DRAFT WHERE APPLICABLE MUST REMAIN WITHIN DIMENSIONS

DIMENSION STYLE: MM ONLY	SCALE: ---	DESIGN UNITS: METRIC	THIRD ANGLE PROJECTION
DRAWN BY: NKONDO	DATE: 2012/09/10	TITLE: 0.5 FPC CONN ZIF SMT R/A WITH TAPE EMBSTP PKG	
CHECKED BY: KTAKAHASHI	DATE: 2012/09/10		
APPROVED BY: KMORIKAWA	DATE: 2013/03/15	molex	
MATERIAL NO.: SEE CHART		DOCUMENT NO.: SD-52435-023	SHEET NO.: 1 OF 3
SIZE: A3	THIS DRAWING CONTAINS INFORMATION THAT IS PROPRIETARY TO MOLEX INCORPORATED AND SHOULD NOT BE USED WITHOUT WRITTEN PERMISSION		

tb_frame_A3_J_ME_S
Rev G 2012/01/25

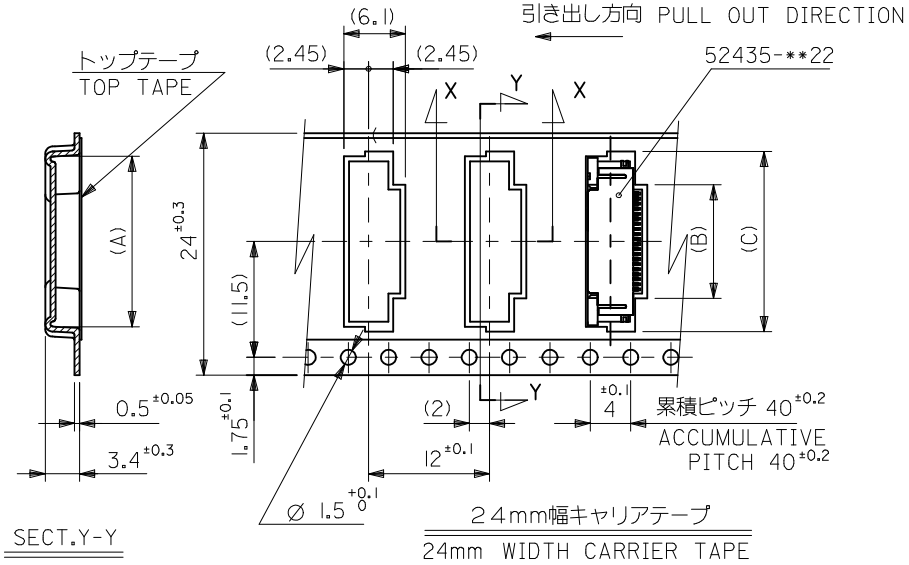

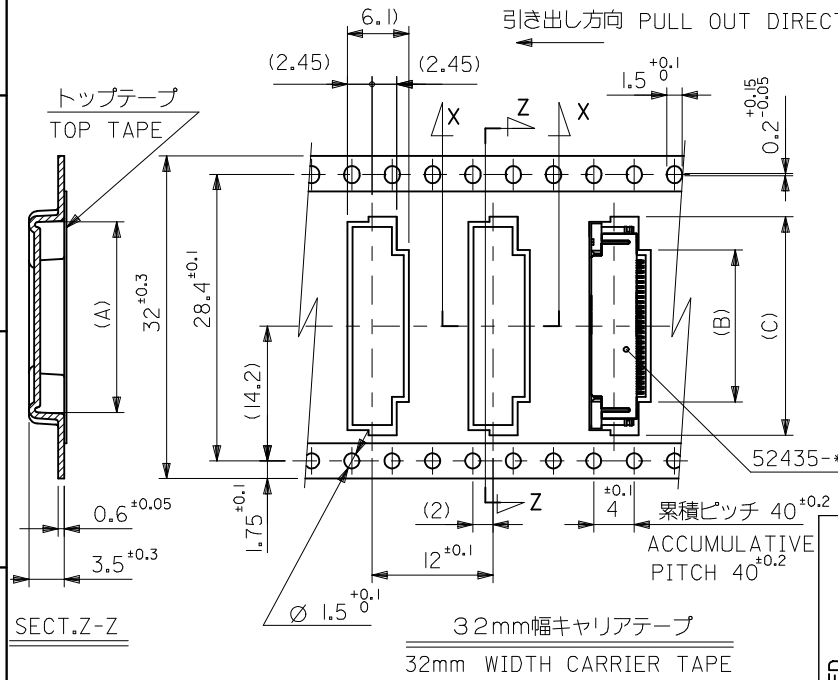

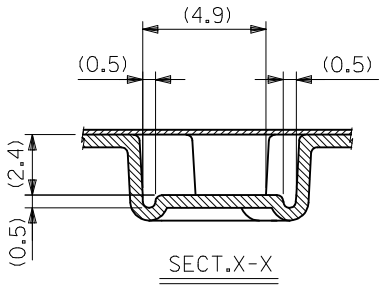

キャリアテープ幅 CARRIER TAPE WIDTH	D	(C)	(B)	(A)	オーダー番号 ORDER NO.	極数 CIRCUIT
32	33.5	22.4	15.8	21.4	52435-2933	29
		21.9	15.3	20.9	-2833	28
		21.4	14.8	20.4	-2733	27
		20.9	14.3	19.9	-2633	26
		20.4	13.8	19.4	-2533	25
		19.9	13.3	18.9	-2433	24
		19.4	12.8	18.4	-2333	23
		18.9	12.3	17.9	52435-2233	22

RELEASED
EC NO: J2013-1014 2012/09/10
DRWN:NKONDO 2012/09/10
CH'KD:KTAKAHASHI 2013/03/15
APPR:KMORIKAWA
DESCRIPTION
REV 0

GENERAL TOLERANCES (UNLESS SPECIFIED)

10 UNDER	±0.2
10 OVER 30 UNDER	±0.25
30 OVER	±0.3
ANGULAR ±3 °	

DRAFT WHERE APPLICABLE MUST REMAIN WITHIN DIMENSIONS

DIMENSION STYLE: MM ONLY
SCALE: ---
DESIGN UNITS: METRIC
THIRD ANGLE PROJECTION

DRAWN BY: NKONDO DATE: 2012/09/10
CHECKED BY: KTAKAHASHI DATE: 2012/09/10
APPROVED BY: KMORIKAWA DATE: 2013/03/15

TITLE: 0.5 FPC CONN ZIF SMT R/A WITH TAPE EMBSTP PKG

molex

MATERIAL NO.: SEE CHART
DOCUMENT NO.: SD-52435-023
SHEET NO.: 2 OF 3
SIZE: A3

THIS DRAWING CONTAINS INFORMATION THAT IS PROPRIETARY TO MOLEX INCORPORATED AND SHOULD NOT BE USED WITHOUT WRITTEN PERMISSION

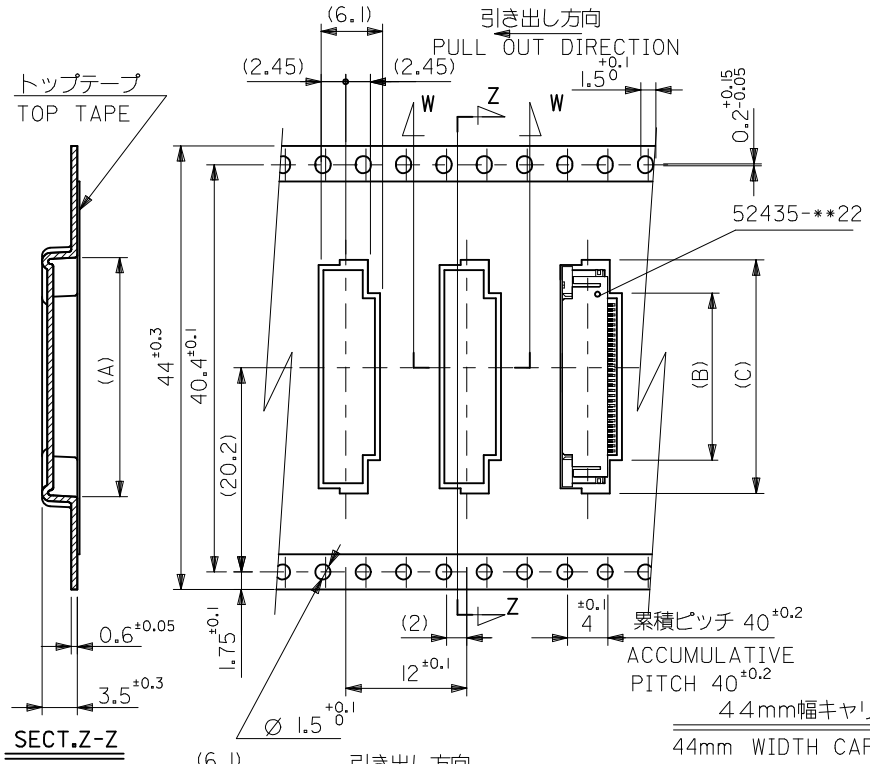

SECT.Z-Z

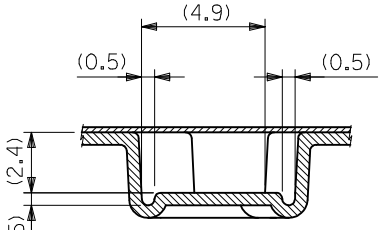

SECT.W-W

44	45.5	22.9	16.3	21.9	52435-3033	30
キャリアテープ幅 CARRIER TAPE WIDTH	D	(C)	(B)	(A)	オーダー番号 ORDER NO.	極数 CIRCUIT

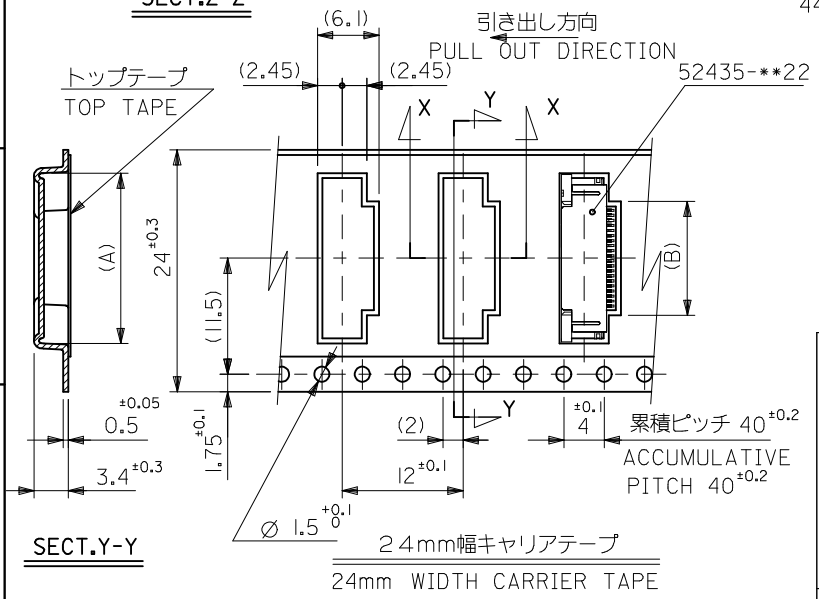

SECT.Y-Y

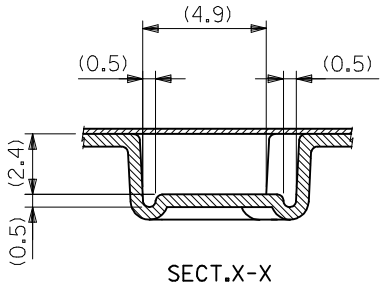

SECT.X-X

24	25.5	11.8	17.4	52435-2133	21
キャリアテープ幅 CARRIER TAPE WIDTH	D	(B)	(A)	オーダー番号 ORDER NO.	極数 CIRCUIT

RELEASED
EC NO: J2013-1014
DRWN:NKONDO 2012/09/10
CH'KD:KTAKAHASHI 2012/09/10
APPR:KMORIKAWA 2013/03/15
DESCRIPTION
REV 0

GENERAL TOLERANCES (UNLESS SPECIFIED)

10 UNDER	±0.2
10 OVER 30 UNDER	±0.25
30 OVER	±0.3
ANGULAR ±3 °	

DRAFT WHERE APPLICABLE MUST REMAIN WITHIN DIMENSIONS

DIMENSION STYLE: MM ONLY
SCALE: ---
DESIGN UNITS: METRIC
THIRD ANGLE PROJECTION

DRAWN BY: NKONDO DATE: 2012/09/10
CHECKED BY: KTAKAHASHI DATE: 2012/09/10
APPROVED BY: KMORIKAWA DATE: 2013/03/15

TITLE: 0.5 FPC CONN ZIF SMT R/A WITH TAPE EMBSTP PKG

molex

MATERIAL NO.: SEE CHART
DOCUMENT NO.: SD-52435-023
SHEET NO.: 3 OF 3
SIZE: A3

THIS DRAWING CONTAINS INFORMATION THAT IS PROPRIETARY TO MOLEX INCORPORATED AND SHOULD NOT BE USED WITHOUT WRITTEN PERMISSION