AP1502/A

200Khz, 2A PWM Buck DC/DC Converter & 1 Linear CTRL (Preliminary)

■ Features

- Provides two regulated voltages
  - -one PWM Regulator
  - -one Linear Controller
- Output voltage: 3.3V, 5V, 12V and adjustable output version
- Adjustable version output voltage range, 1.23V to 12V±2%
- 200Khz ±10% fixed switching frequency
- Thermal-shutdown and current-limit protection
- Shutdown control input(EN pin)
- Operating voltage can be up to 18V
- Output load current: 2A
- 7-pin SOP package
- Low power standby mode
- Built-in switching transistor on chip

■ Applications

- Simple High-efficiency step-down regulator
- On-card switching regulators
- Positive to negative converter

■ General Description

The AP1502 series are monolithic IC that design for PWM and linear power controller. The PWM regulator ability of driving a 2A load without additional transistor component. Due to reducing the number of external component, the board space can be saved easily. The external shutdown function can be controlled by logic level and then come into standby mode. The internal compensation makes feedback control have good line and load regulation without external design. Regarding protected function, thermal shutdown is to prevent over temperature operating from damage, and current limit is against over current operating of the output switch. The AP1502 series operates at a switching frequency of 200Khz thus allowing smaller sized filter components than what would be needed with lower frequency switching regulators. Other features include a guaranteed ±2% tolerance on output voltage under specified input voltage and output load conditions, and ±10% on the oscillator frequency. The output version included fixed 3.3V, 5V, 12V, and an adjustable type. The linear controller ability of driving an external NPN transistor, which current limit set 30mA & 50mA pre-driver of AP1502 and AP1502A. The packages are available in a standard SOP7 package.

■ Pin Assignments

(Top View)

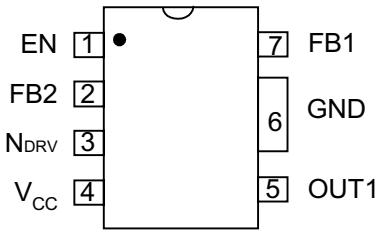

SOP-7L

■ Pin Descriptions

Name	Description
V_{CC}	Operating voltage input
OUT1	Switching output
GND	Ground
FB1 FB2	Output voltage feedback control
EN	ON/OFF Shutdown
N_{DRV}	Linear Controller Driving External NPN

This datasheet contains new product information. Anachip Corp. reserves the rights to modify the product specification without notice. No liability is assumed as a result of the use of this product. No rights under any patent accompany the sale of the product.

■ Ordering Information

AP1502 X XX X X

Type	Output version	Package	Packing
Linear pre-driver Blank : 30mA A : 50mA	Blank:Adjustable 33 : 3.3V 50 : 5.0V 12 : 12V	S : SOP-7L	Blank : Tube A : Taping

■ Block Diagram

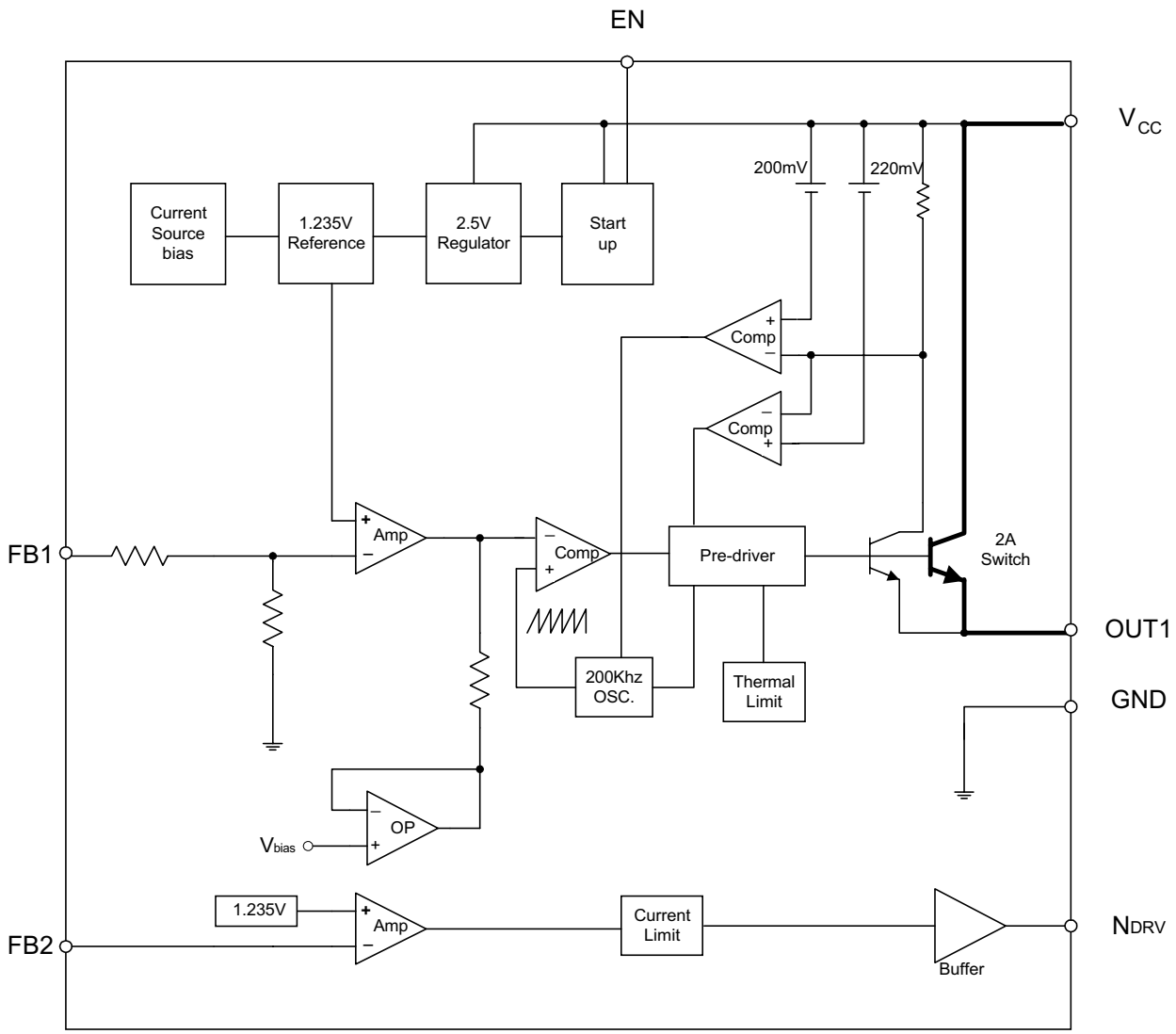

■ Absolute Maximum Ratings

Symbol	Parameter	Rating	Unit
V_{CC}	Supply Voltage	20	V
V_{EN}	EN Pin input voltage	-0.3 to +20	V
V_{FB}	Feedback Pin voltage	-0.3 to +20	V
V_{OUT}	Output voltage to ground	-1	V
V_{NDRV}	Linear driver voltage to ground	$-0.3 \leqq V \leqq 20$	V
P_D	Power dissipation	Internally limited	W
T_{ST}	Storage temperature	-65 to 150	°C
T_{OP}	Operating temperature	-40 to +125°	°C
V_{OP}	Operating voltage	4.5 to 18	V

■ Electrical Characteristics (All Output Voltage Versions & Channels)

Unless otherwise specified, V_{IN}=12V for 3.3V, 5V, adjustable version and V_{IN}=18V for the 12V version. I_{LOAD} = 0.5A.

Symbol	Parameter		Conditions	Min.	Typ.	Max.	Unit
I_B	Feedback bias current		$V_{FB1/2}$=1.3V		10	50	nA
F_{OSC}	oscillator frequency			180	200	220	Khz
V_{SAT}	saturation voltage		I_{OUT}=2A no outside circuit V_{FB1}=0V force driver on		1.16	1.4	V
DC	Max. Duty Cycle(ON)		V_{FB1} =0V force driver on		100		%
	Min. Duty cycle(OFF)		V_{FB1} =12V force driver off		0		
I_{CL1}	current limit		peak current no outside circuit V_{FB1} =0 force driver on	2.4	2.8	3.2	A
I_L	Output = 0	Output leakage current	no outside circuit $V_{FB1/2}$ =12 force driver off			50	uA
	Output = 1		V_{CC1}=18V		2	30	mA
I_Q	Quiescent Current		$V_{FB1/2}$=12V force driver off		5	10	mA
I_{STBY}	Standby Quiescent Current		EN (ON/OFF) pin=5V V_{CC1}=18V		80	200	uA
						250	
V_{IL}	ON/OFF pin logic input threshold voltage		low (regulator ON)	-	1.3	0.6	V
V_{IH}			high (regulator OFF)	2.0		-	
I_H	EN (ON/OFF) pin logic input current		V_{LOGIC}=2.5V (OFF)		5	15	uA
I_L	ON/OFF pin input current		V_{LOGIC} =0.5V (ON)		0.02	5	
I_{CL2}	Output current current limit (AP1502)		V_{CC1}=5V, V_{OUT2}=V_{FB2}=0V	25	30	35	mA
	Output current Current limit (AP1502A)			40	50	60	mA
V_{FB2}	Output Feedback Voltage		4.75V ≤ V_{CC1} ≤ 18V 3.0V ≤ V_{CC2} ≤ 18V 0.2A ≤ I_{LOAD} ≤ 2A	1.205	1.23	1.255	V
Θ_{JC}	Thermal Resistance		Junction to case		15		°C/W
Θ_{JA}	Thermal Resistance		Junction to ambient		90		°C/W

■ Electrical Characteristics (Continued)

Specifications are for full operating temperature range, the other types are for T_J=25°C, 4.75V ≤ V_{IN} ≤ 18V

	Symbol	Parameter	Conditions	Typ.	Limit	Unit
AP1502-ADJ AP1502A-ADJ	V_{FB1}	Output Feedback	4.5V ≤ V_{CC1} ≤ 18V 0.2A ≤ I_{LOAD} ≤ 2A	1.23	1.205 1.255	V V_{MIN} V_{MAX}
	η	Efficiency	V_{CC1} = 12V, I_{LOAD}=2A, V_{OUT} programmed for 3V	77		%
AP1502-3.3V	V_{OUT1}	Output voltage	4.5V ≤ V_{CC1} ≤ 18V 0.2A ≤ I_{LOAD} ≤ 2A	3.3	3.23 3.37	V V_{MIN} V_{MAX}
	η	Efficiency	V_{CC1} = 12V, I_{LOAD}=2A	77		%
AP1502-5V	V_{OUT1}	Output voltage	7.0V ≤ V_{CC1} ≤ 18V 0.2A ≤ I_{LOAD} ≤ 2A	5	4.90 5.10	V V_{MIN} V_{MAX}
	η	Efficiency	V_{CC1} = 12V, I_{LOAD}=2A	84		%
AP1502-12V	V_{OUT1}	Output voltage	15V ≤ V_{CC1} ≤ 18V 0.2A ≤ I_{LOAD} ≤ 2A	12	11.75 12.25	V V_{MIN} V_{MAX}
	η	Efficiency	V_{CC1} = 15V, I_{LOAD}=2A	91		%

■ Typical Application Circuit

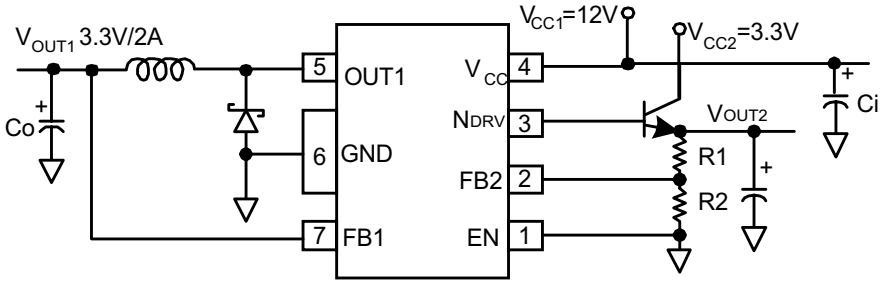

AP1502/A-33

■ Marking Information

(Top View)

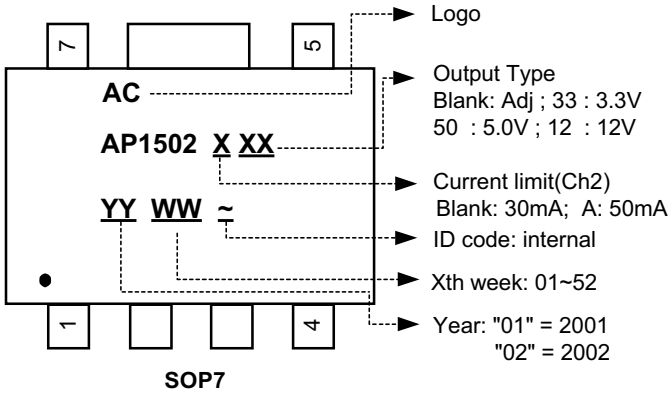

SOP7

■ Package Information

Package Type: SOP-7L

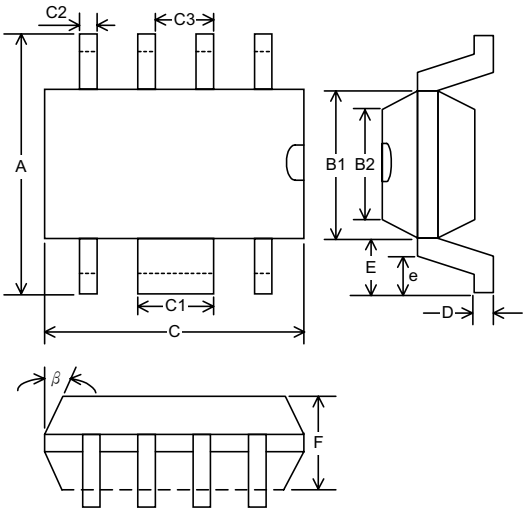

Symbol	Dimensions in Millimeters		
	Min.	Typ.	Max.
A	5.79	5.99	6.19
B1	3.83	3.91	3.99
B2	3.78	3.86	3.94
C	4.80	4.87	4.94
C1	1.57	1.67	1.77
C2	0.32	0.4	0.48
C3	1.17	1.27	1.37
D	0.19	0.22	0.25
E	1.04 Ref.		
e	0.48	0.68	0.88
F	1.35	1.45	1.55
β	7°		