Part Number: 0923160440

Status: Active

Overview:

Description: Picoflex® PF-50 IDT-IDT, 4 Circuits, 0.40m (1.31') Length

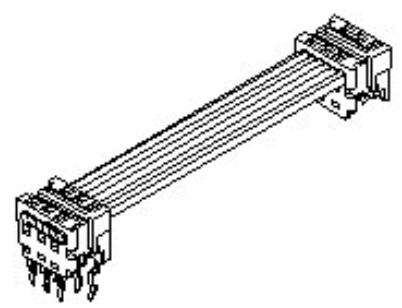

Series image - Reference only

Documents:

3D Model
Drawing (PDF)
Product Specification PS-99020-0011 (PDF)
RoHS Certificate of Compliance (PDF)

General	
Product Family	Cable Assemblies
Series	92316
Connector to Connector	Picoflex® PCB to IDT
Overview	Picoflex®
Product Name	Picoflex®
Physical	
Cable Length	0.40m (1.31')
Circuits (Loaded)	4
Color - Resin	Natural
Gender	Female-Female
Lock to Mating Part	None
Material - Metal	Phosphor Bronze
Material - Plating Mating	Tin
Material - Plating Termination	Tin
Material - Resin	Polyester
Packaging Type	Bag
Pitch - Mating Interface (in)	0.050 In
Pitch - Mating Interface (mm)	1.27 mm
Plating min: Mating (µin)	80.00
Plating min: Mating (µm)	2.000
Plating min: Termination (µin)	80.00
Plating min: Termination (µm)	2.00
Single Ended	No
Termination Interface: Style	IDT or Pierce
Termination Interface: Style	Through Hole - Kinked Pin
Waterproof / Dustproof	No
Wire Insulation Diameter	N/A
Wire Size AWG	28
Wire/Cable Type	PVC
Wire/Cable Type	Ribbon Cable
Electrical	
Current - Maximum	1.2A
Shielded	No
Voltage - Maximum	250V
Material Info	
Reference - Drawing Numbers	
Product Specification	PS-99020-0011
Sales Drawing	SD-92316-001

EU RoHS
ELV and RoHS Compliant
REACH SVHC
Not Reviewed
Halogen-Free Status
Not Reviewed

China RoHS

Need more information on product environmental compliance?

Email productcompliance@molex.com
Please visit the Contact Us section for any non-product compliance questions.

Search Parts in this Series
92316 Series

Mates With
Picoflex® PF-50 Header 90325 , 90800 , 90779 , 90715 , 90814