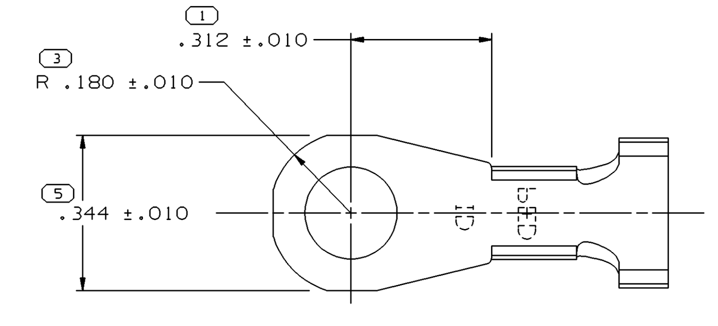

TYPE 102
SAME AS TYPE 101
EXCEPT AS SHOWN

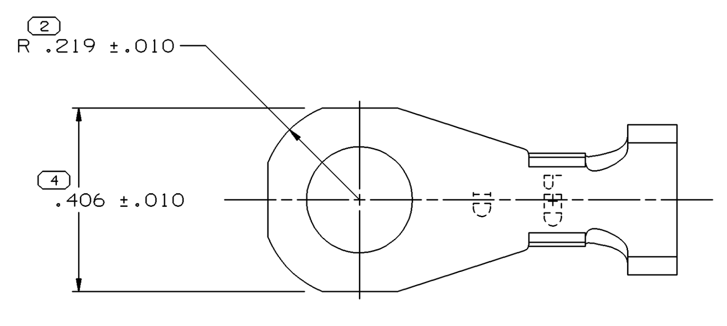

TYPE 103
SAME AS TYPE 101
EXCEPT AS SHOWN

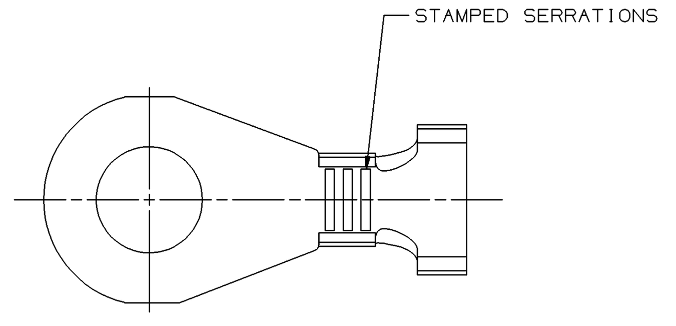

TYPE 104
SAME AS TYPE 101
EXCEPT AS SHOWN

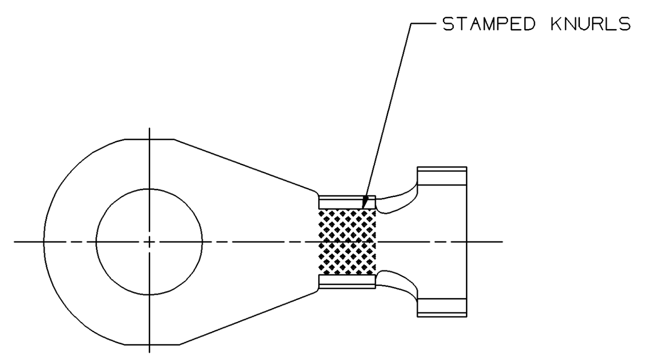

TYPE 105
SAME AS TYPE 101
EXCEPT AS SHOWN

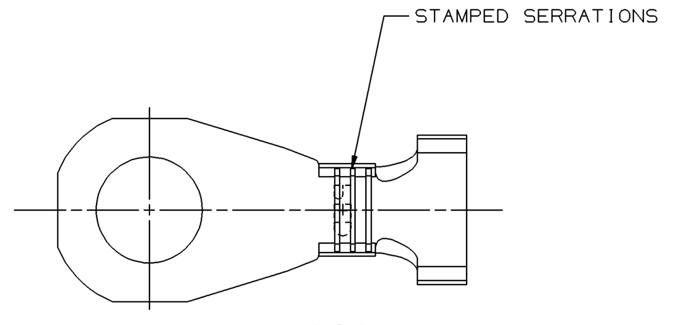

TYPE 106
SAME AS TYPE 103
EXCEPT AS SHOWN

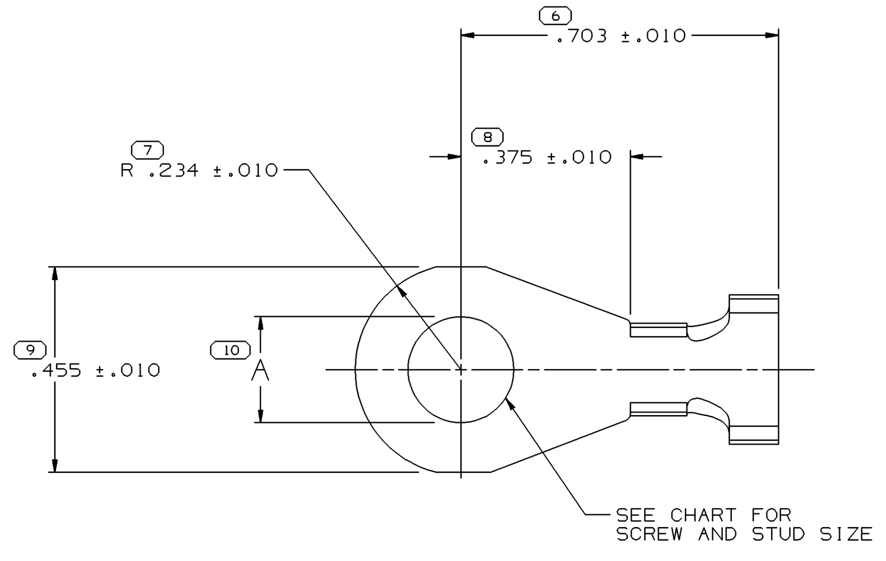

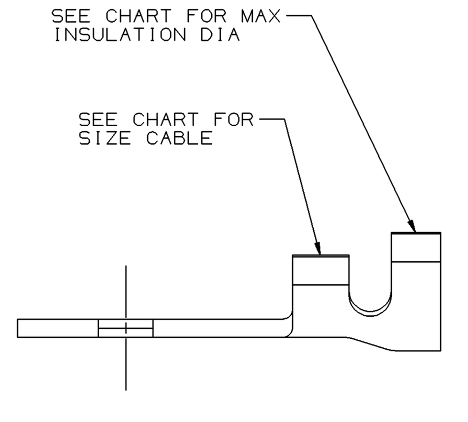

TYPE 101

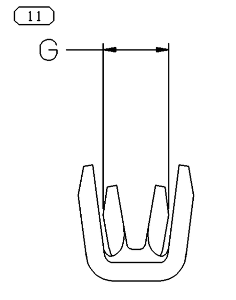

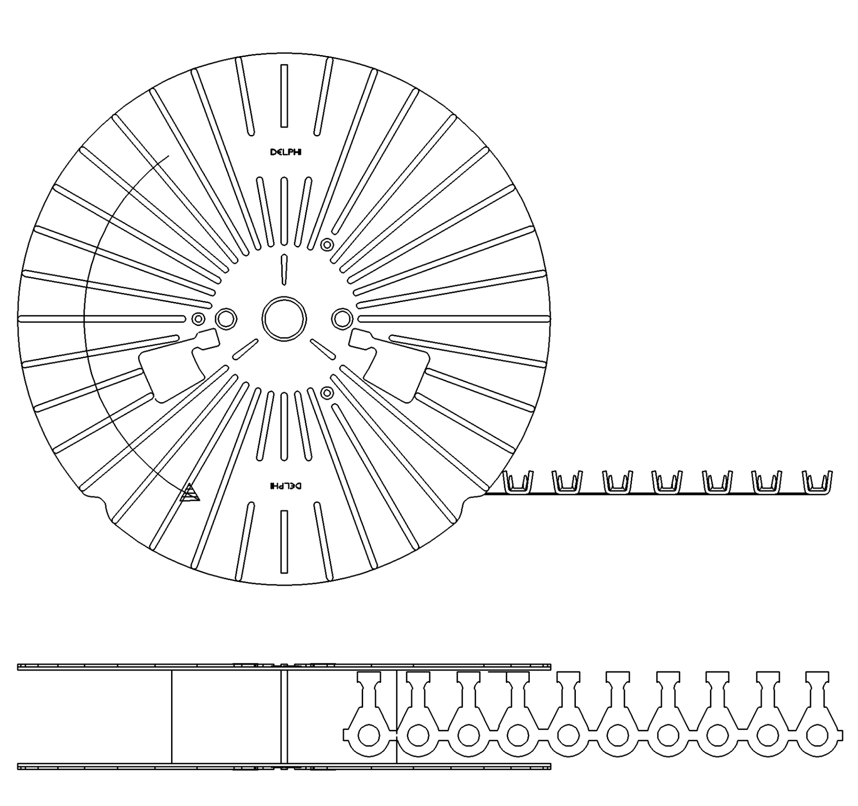

TERMINAL
COIL WINDING
SCALE : NONE
TYPE I

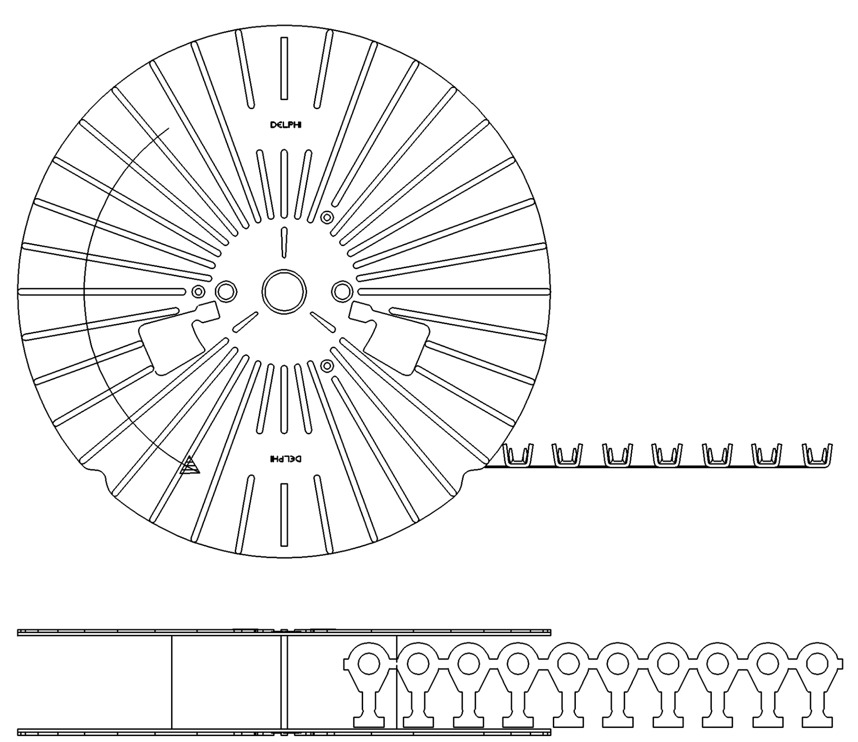

TERMINAL
COIL WINDING
SCALE : NONE
TYPE II

SYMBOL DEFINITION			MISSING NUMBERS
A DIMENSION WITHOUT AN INSPECTION REPORT SYMBOL ⬭ DOES NOT REQUIRE INSPECTION. IT MAY BE CONTROLLED ON AN INDIVIDUAL COMPONENT DRAWING.	TOTAL NO. OF SYMBOLS ON DRAWING	11	
	LAST NO. USED	11	

DATE	STG	REV	N/P	CHG	ZONE	REVISION HISTORY	AUTH	DR	APVD 1	APVD 2
15OC99	R	05	-	-		ALL PARTS - WERE SEPARATE DWGS AND 02977819 - OBSOLETE	990003	FMO	JVM	LRT
18MR04	R	06	-	-		12191850 - OBSOLETE	252859	TLD	TLD	RAL
23NO04	R	07	-	-		02973375 & 02984576 - ADDED NOTE #2 AND COIL WINDING VIEWS	261434	CCV	JAA	GER
07DE04	R	08	-	-		13517635-42 - RELEASED; 13517635-42, 02962409,02962421,02973375,02977486, 02977821,02984576 & 12015104-05 - REMOVED NOTE #2 AND ADDED TYPE I & TYPE II LABEL ON CARRIER STRIP VIEWS & WINDING TYPE ON CHART	261968	JBD	JAA	GER
28FE05	R	09	-	-		ALL ACTIVE PARTS - REVISED TOL CHART	265169	MDH	FKV	GER
10MY05	R	10	-	-		02962409,02962421,02973375,02977486 02984576,02977821 & 12015104-05 WERE TYPE II; 13517635-42 WERE TYPE I	267876	EVV	JVM	GER

UNPLATED						PLATED											
PART NO	REV	N/P	STATUS	MAT'L SIZE	MAT'L SPEC	PART NO	REV	N/P	STATUS	MAT'L SPEC	SIZE (MM²)	DIA (MM)	ID	TYPE	A ±.003	G ±.015	TERMINAL COIL WINDING TYPE
13517642	01	AB	-	.032 X .969	M3614126	-	-	-	-	-	0.8-0.5	3.13-2.69	-	101	.282	.145	TYPE II
13517641	01	AB	-	.032 X .969	M3614126	-	-	-	-	-	(TWO) 0.8-0.5	2.4-2.03	-	101	.282	.18	TYPE II
13517640	01	AB	-	.032 X .969	M3614126	-	-	-	-	-	0.8-0.5	2.4-2.03	-	101	.282	.145	TYPE II
13517639	01	AB	-	.032 X .969	M3614126	-	-	-	-	-	2-1	3.05-2.48	-	101	.244	.15	TYPE II
13517638	01	AB	-	.032 X .969	M3614126	-	-	-	-	-	0.8-0.5	2.4-2.03	-	101	.244	.145	TYPE II
13517637	01	AB	-	.032 X .969	M3614126	13517636	01	AB	-	M3649126	2-1	3.05-2.48	-	101	.282	.15	TYPE II
13517635	01	AB	-	.032 X .969	M3614126	-	-	-	-	-	0.8-0.5	2.4-2.03	-	101	.204	.145	TYPE II
				.0403 X .906		12191850	A1	-	OBSOLETE	M3649154	5-3	4.48-3.49	11	106	.244	.245	-
				.032 X .969		12103909	A2	-		M3649126	(TWO) 0.8-0.5	2.4-2.03		105	.282	.18	-
12015766	B3	-		.032 X .969	M3614126						2	3.89 MAX		104	.244	.17	-
12015108	C3	-		.0403 X .906	M3614154						(TWO) 5-3	-	211	103	.244	.33	-
12015107	C3	-		.0403 X 906	M3614154						5-3	4.48-3.49	11	103	.244	.245	-
12015105	B5	-		.032 X .969	M3614126						2-1	3.05-2.48		101	.244	.15	TYPE I
12015104	B5	-		.032 X .969	M3614126						0.8-0.5	2.4-2.03		101	.244	.145	TYPE I
12004371	B	-	OBSOLETE	.0403 X .875	M3614152						8	7.24-6.48	8	102	.204	.26	-
08917368	C3	-		.0403 X .906	M3614154						5-3	4.48-3.49	11	103	.173	.245	-
02989983	BJ	-	OBSOLETE	.032 X .969	M3614126						3	3.65-3.49		101	.282	.195	-
02989957	CM	-	OBSOLETE	.0403 X .906	M3614154						(TWO) 5-3	-	211	103	.235	.33	-
02984772	CM	-	OBSOLETE	.0403 X .906	M3614154						5-3	4.48-3.49	11	103	.235	.245	-
02984007	BJ	-	OBSOLETE	.032 X .969	M3614126						3	3.65-3.49		101	.235	.195	-
02977821	BK5	-		.032 X .969	M3614126						0.8-0.5	3.13-2.69		101	.282	.145	TYPE I
02977819	BK3	-	OBSOLETE	.032 X .969	M3614126	02977820	BK	-	OBSOLETE	M3649126	0.8-0.5	3.13-2.69		101	.235	.145	-
02977620	BK3	-		.0403 X .875	M3614152						2-1	3.97-3.36	15	102	.147	.165	-
02977619	BK3	-		.0403 X .875	M3614152	12010820	BK3	-		M3649152	2-1	3.97-3.36	15	102	.173	.165	-
02977618	BK3	-		.0403 X .875	M3614152	02989529	BK	-	OBSOLETE	M3649152	2-1	3.97-3.36	15	102	.204	.165	-
02977488	BK4	-	OBSOLETE	.032 X .969	M3614126						8	5.54-5.28	8	102	.147	.26	-
02977487	BK3	-		.0403 X .875	M3614152	02989675	BK3	-		M3649152	5-3	4.48-3.49	11	102	.147	.245	-
02977486	BJ6	-		.032 X .969	M3614126	02989820	BJ	-	OBSOLETE	M3649126	(TWO) 0.8-0.5	2.4-2.03		101	.282	.18	TYPE I
02977485	BJ	-	OBSOLETE	.032 X .969	M3614126						(TWO) 0.8-0.5	2.4-2.03		101	.235	.18	-
02977484	BJ	-	OBSOLETE	.032 X .969	M3614126						2-1	3.05-2.48		101	.235	.15	-
02973375	BJ6	-		.032 X .969	M3614126	02984576	BJ6	-		M3649126	2-1	3.05-2.48		101	.282	.15	TYPE I
02973214	BJ4	-		.032 X .969	M3614126						(TWO) 0.8-0.5	2.4-2.03		101	.204	.18	-
02973110	BJ	-	OBSOLETE	.032 X .969	M3614126						2-1	3.05-2.48		101	.204	.15	-
02965721	BK6	-		.0403 X .875	M3614152	02977825	BK	-	OBSOLETE	M3649152	8	5.54-5.28	8	102	.204	.26	-
02965720	BK6	-		.0403 X .875	M3614152						8	5.54-5.28	8	102	.173	.26	-
02965719	BK7	-		.0403 X .875	M3614152	02977131	BL2	-		M3649152	5-3	4.48-3.49	11	102	.204	.245	-
02965718	BK2	-		.0403 X .875	M3614152	02984118	BK	-	OBSOLETE	M3649152	5-3	4.48-3.49	11	102	.173	.245	-
02962422	BK	-	OBSOLETE	.032 X .969	M3614126						0.8-0.5	2.4-2.03		101	.173	.145	-
02962421	BK6	-		.032 X .969	M3614126						0.8-0.5	2.4-2.03		101	.204	.145	TYPE I
02962409	BK6	-		.032 X .969	M3614126						0.8-0.5	2.4-2.03		101	.282	.145	TYPE I
02962153	BK	-	OBSOLETE	.032 X .969	M3614126	02977818	BK	-	OBSOLETE	M3649126	0.8-0.5	2.4-2.03		101	.235	.145	-

⌀ A ±.003	STANDARD	METRIC
.282	1/4	M6.3
.244	#12	M6
.235	#12	-
.204	#10	M5
.173	#8	M4
.147	#6	M3.5
	SCREW/STUD SIZE	

NOTES

1. UNLESS OTHERWISE SPECIFIED AND/OR INDICATED:

   DIMENSIONS ARE TO FACE OF VIEW SHOWN AND AUTOMATICALLY ROUNDED BY COMPUTER FOR INSPECTION (SEE MATH MODEL FOR PRECISE DIMENSIONS). FOR ALL OTHER DIMENSIONS NOT SHOWN BUT REQUIRED FOR TOOL BUILD, SEE MATH MODEL FOR PRECISE TOOL PATH DATA.

(9) PROCESS SENSITIVE DIMENSION

DIMENSIONS ENCLOSED IN ( ) INDICATE REFERENCE DIMENSIONS AND NO TOLERANCE LIMITS ARE ESTABLISHED

DIMENSIONAL RANGE (IN)		CHART J
FROM / TO	0 / .500	>.500
TOLERANCE UNLESS OTHERWISE SPECIFIED	±.005	±.010
ANGULAR TOLERANCE ±2°		

DWG TYPE: PART DRAWING
STYLE
VOLUME (CM³)
DISTR CODE: D

UNLESS OTHERWISE SPECIFIED
THIS DOCUMENT IS IN ACCORDANCE WITH ASME Y14.5M-1994 AS AMENDED BY THE GM GLOBAL DIMENSIONING AND TOLERANCING ADDENDUM-2001. SEPARATE PATTERNS OF FEATURES MAY BE GAGED SEPARATELY REGARDLESS OF DATUM REFERENCES.

ALL DIMENSIONS ARE IN INCHES

REFERENCE

THIRD ANGLE PROJECTION

DO NOT SCALE
USE MATH DATA
CAD UNIGRAPHICS

DELPHI
DELPHI PACKARD ELECTRIC SYSTEMS
WARREN, OH

		DATE
DR		
APVD1	H. HOKE	21JL80
APVD2	D.E. THIRY	22SE80
APVD3	R.D. KEARNS	20OC80
APVD4		
APVD5		

SUBSTANCES OF CONCERN AND RECYCLED CONTENT PER DELPHI 10949001

MATERIAL: SEE DRAWING

DRAWING NAME: TAXI TERM RING STR

DRAWING NUMBER: 02962869

SIZE	SCALE	FRAME NO	SHEET NO	STG	REV	N/P
A1x3	5:1	1 OF 2	1 OF 6	R	10	-

DRAWING NUMBER 02962869

SIZE	SCALE	FRAME NO	SHEET NO	STG	REV	N/P
A1x3	5:1	2 OF 2	1 OF 6	R	10	-

02962869