REV.	DATE		APPROVED
A	6/20/02	INITIAL RELEASE	
B	7/6/04	OUTLINE CHANGED AS SHOWN. OLD SEE REV A FOR OLD.	
C	4/3/08	ADDED DIMENSION "B", CORRESPONDING COLUM AND DATA	

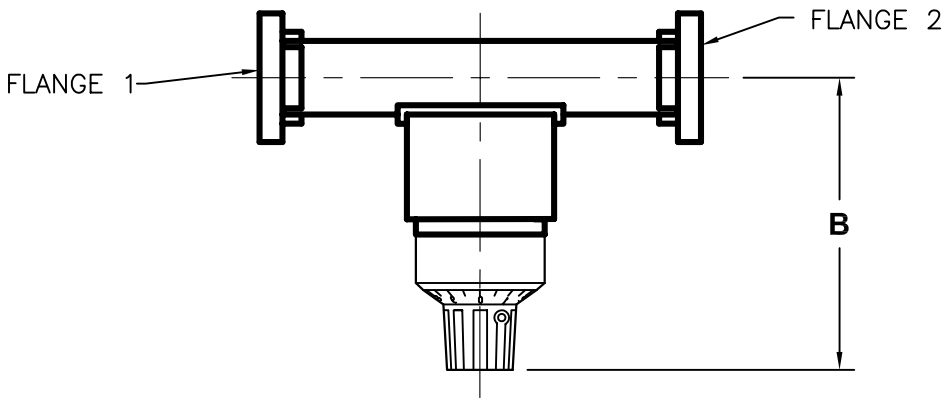

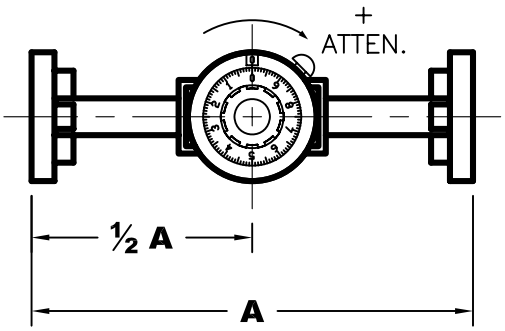

WG SIZE	FREQUENCY (GHz)	DIM. A	DIM. B	POWER (WATTS)
WR284	2.60–3.95	10.0	4.5	11
WR229	3.30–4.90	9.0	3.9	9
WR187	3.95–5.85	8.5	3.5	7
WR159	4.90–7.05	8.0	3.2	5
WR137	5.95–8.20	6.0	3.1	4
WR112	7.05–10.0	5.0	2.8	3
WR90	8.20–12.4	4.0	2.5	2
WR75	10.0–15.0	3.50	3.32	1
WR62	12.4–18.0	3.00	2.24	1
WR51	15.0–22.0	3.00	––	1
WR42	18.0–26.5	3.00	1.97	1
WR34	22.0–33.0	3.00	1.97	1
WR28	26.5–40.0	3.00	1.85	1

FLANGE TYPE
1 = CPRG
2 = CPRF
3 = CMR STANDARD
4 = CMR CLEAR
5 = CMR TAP
6 = UG COVER
7 = UG CHOKE
8 = SPEC
9 = PDR
10 = UDR

MODEL NO.= WG SIZE–620–MAT'L (A/B)*–FLANGE 1–FLANGE 2
EXAMPLE: 28–620A–6–6
*A=ALUMINUM
B=BRASS/COPPER

PERFORMANCE SPECIFICATIONS

VSWR: 1.15 MAX.
INSERTION LOSS: 0.5 dB MAX.
ATTEN. RANGE: 0–30 dB MIN.

MATERIAL –	TREATMENT –	DRAWN R. LYNCH	DATE 6/20/02
FINISH ATM STD GRAY	MOD NO. XXX–620–XX–X–X	CHECKED	DATE
OUTLINE, WAVEGUIDE CVA		APPROVED	DATE
		CAGE CODE: OR8N4	DO NOT SCALE DWG

ADVANCED TECHNICAL MATERIALS, INC.
49 RIDER AVE., PATCHOGUE N.Y. 11772
TEL: (631) 289-0363 FAX: (631) 289-0358
http://www.atmmicrowave.com

PROPRIETARY NOTICE:
THE INFORMATION IN THIS DRAWING IS PROPRIETARY AND SHALL NOT BE USED OR DISCLOSED WITHOUT THE PRIOR WRITTEN CONSENT OF ATM, INC.

UNLESS OTHERWISE NOTED DIMENSIONS ARE IN INCHES TOLERANCES ARE: FRACTIONS ±1/64 DECIMALS ±.01 ±.005 ANGLES ±1/2°

SHEET.	SCALE	DWG. NO.	REV.
1/1	N.T.S.	5028	C