NARROW BAND FM IF AMPLIFIER

FEATURES

- **Low Voltage Operation**
- **Two Stage IF Limiter**
- **Mixer**
- **Adjustable Internal Regulator**

APPLICATIONS

- **GPS Systems**
- **Digital Communications**

DESCRIPTION

The TK14600 is a low operating voltage FM IF system designed for use in GPS receivers and other digital communications systems. This IC contains a high gain 2-stage IF limiter with an internal voltage regulator.

The TK14600 is available in the SSOP-12 (MFP-12) surface mount package.

TK14600

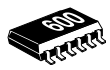

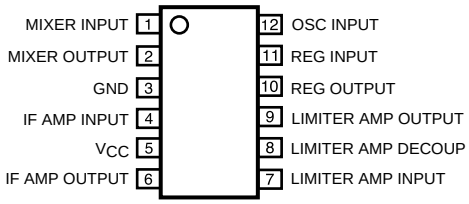

BLOCK DIAGRAM

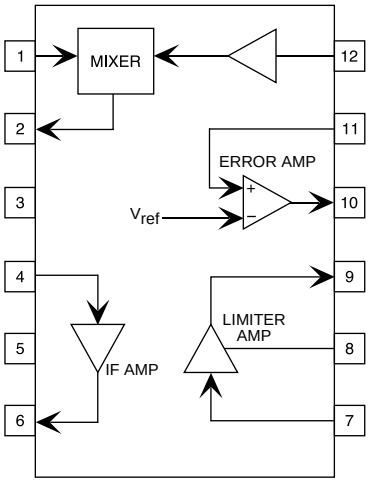

ORDERING INFORMATION

TK14600M □□

Tape/Reel Code

TAPE/REEL CODE
BX: Bulk/Bag
TL: Tape Left
MG: Magazine

ABSOLUTE MAXIMUM RATINGS

Maximum Supply Voltage ..... 6 V
Operating Voltage Range ..... 2.3 to 5.5 V
Junction Temperature ..... 150 °C
Power Dissipation (Note 1) ..... 250 mW
Lead Soldering Temp. (10 sec.) ..... 235 °C
Storage Temperature Range ..... -55 to +150 °C
Operating Temperature Range ..... -30 to +80 °C

TK14600 ELECTRICAL CHARACTERISTICS

Test Conditions: V_{CC} = 3 V, F_{RF} = 20 MHz, F_{OSC} = 18.9 MHz, Injection Level = -5dBm, F_{IF} = 1.1 MHz

SYMBOL	PARAMETER	TEST CONDITIONS	MIN	TYP	MAX	UNITS
I_{CC}	Supply Current	No input	2.0	2.7	3.4	mA
GM	Mixer Transfer Gain	f_{RF} = 20.0 MHz, 50 dBµ input f_{OSC} = 18.9 MHz, -5 dBm input	24	30	36	dB
f_{IN}	Mixer Operating Frequency Range		0.1		40	MHz
GIF1	IF Amp Gain	40 dBµ input, f_{IF} = 1.1 MHz	24	30	36	dB
V_{OUT1}	IF Amp Output Voltage	80 dBµ input, f_{IF} = 1.1 MHz	0.22	0.33	0.44	V_{P-P}
GIF2	Limiter Amp Gain	20 dBµ input, f_{IF} = 1.1 MHz	65	75	85	dB
V_{OUT2}	Limiter Amp Output Voltage	80 dBµ input, f_{IF} = 1.1 MHz	0.6	1.0	1.4	V_{P-P}
f_{IF}	IF Amp, Limiter Amp Operating Frequency Range		0.1		5	MHz
V_R	Voltage Regulator Output	I_{OUT} = 10 mA	1.8	2.0	2.2	V

Note 1: Power dissipation is 250 mW in free air. Derate at 2.0 mW/°C for operation above 25 °C.

TEST CIRCUIT

Test Conditions: V_{CC} = 3 V, T_A = 25 °C

Mixer	SG1 (RF Input)	20 MHz Non-mod
	SG2 (Local Input)	18.9 MHz Non-mod
	V1 (IF Output)	1.1 MHz
IF Amp	SG3 (IF1 Input)	1.1 MHz Non-mod
	V2 (IF1 Output)	
Limiter Amp	SG4 (IF2 Input)	1.1 MHz Non-mod
	V3 (IF2 Output)	
Regulator	V4 (Regulator Output)	

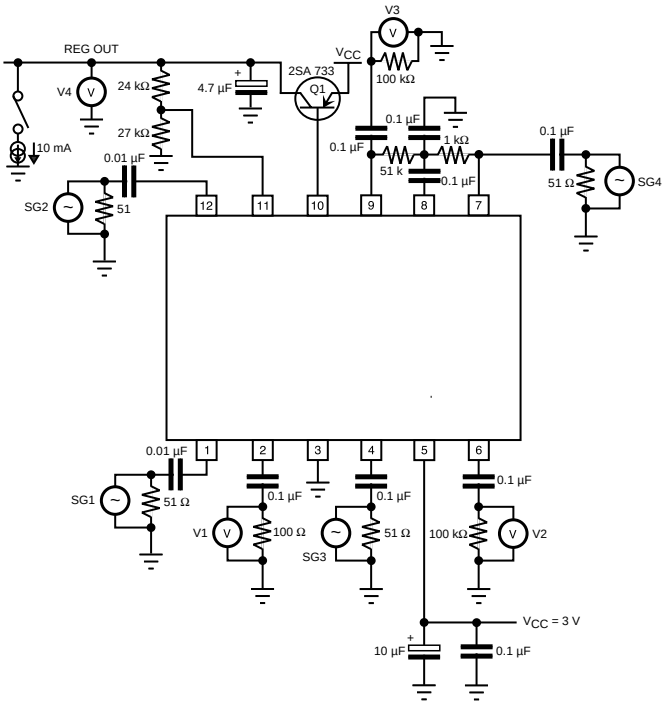

TYPICAL PERFORMANCE CHARACTERISTICS

MIXER FREQUENCY CHARACTERISTICS

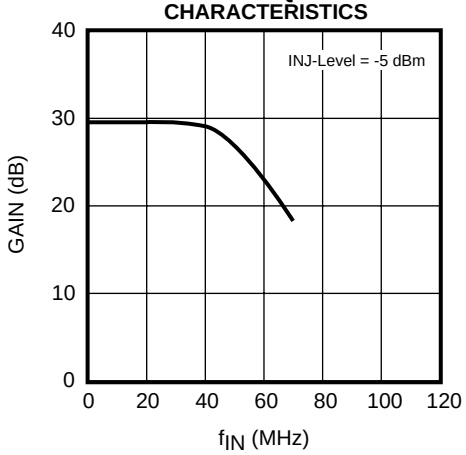

MIXER THIRD ORDER PRODUCTS

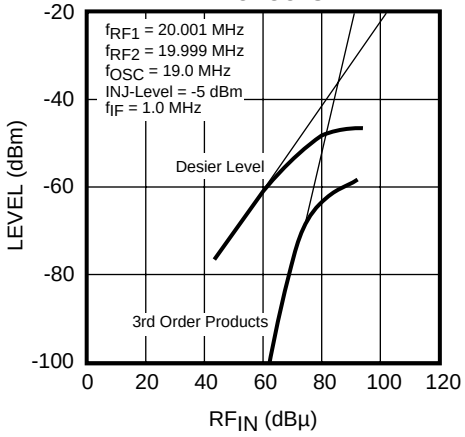

MIXER GAIN vs. INJECTION LEVEL

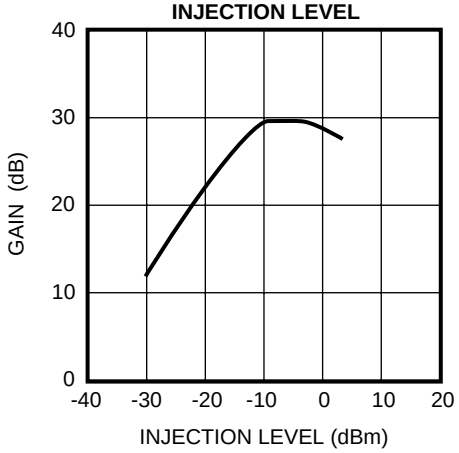

IF FREQUENCY CHARACTERISTICS

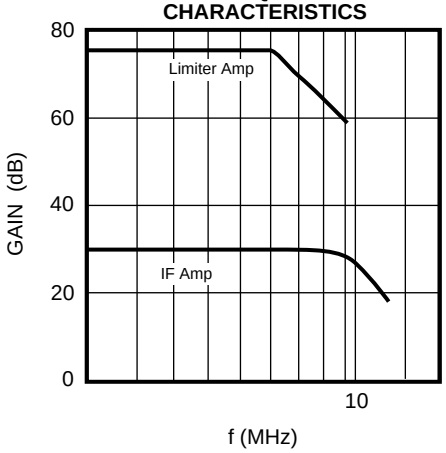

GAIN vs. SUPPLY VOLTAGE

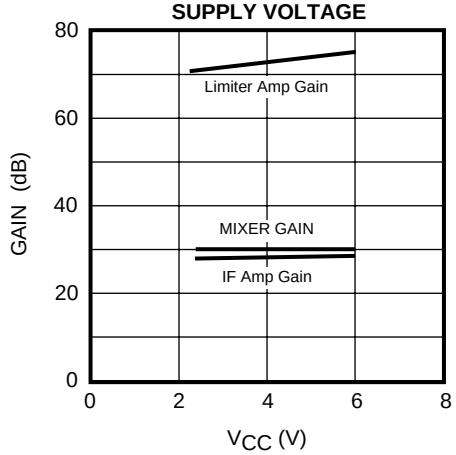

VOLTAGE REGULATOR OUTPUT and SUPPLY CURRENT vs. SUPPLY VOLTAGE

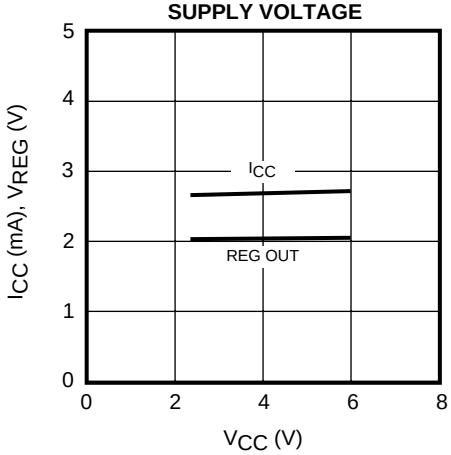

TYPICAL PERFORMANCE CHARACTERISTICS (CONT.)

OUTPUT VOLTAGE vs. SUPPLY VOLTAGE

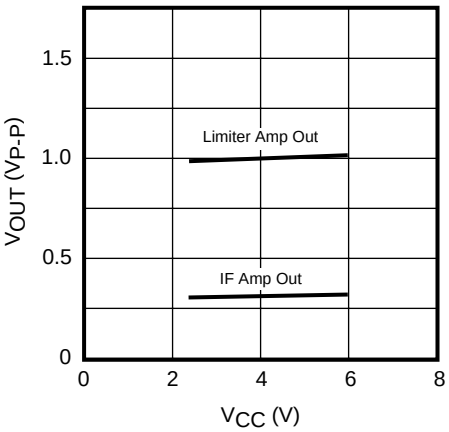

GAIN vs. TEMPERATURE

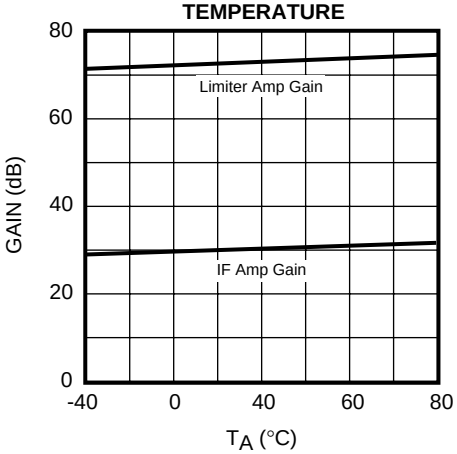

SUPPLY CURRENT and VOLTAGE REGULATOR OUTPUT vs. TEMPERATURE

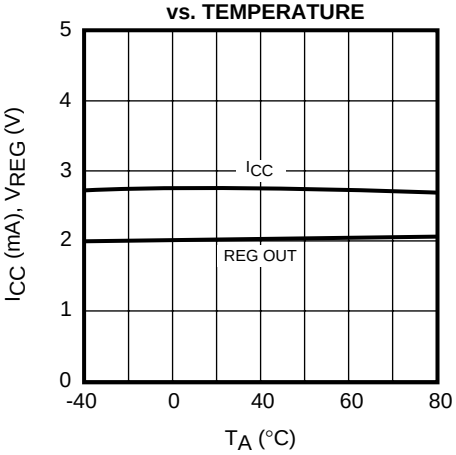

OUTPUT VOLTAGE vs. TEMPERATURE

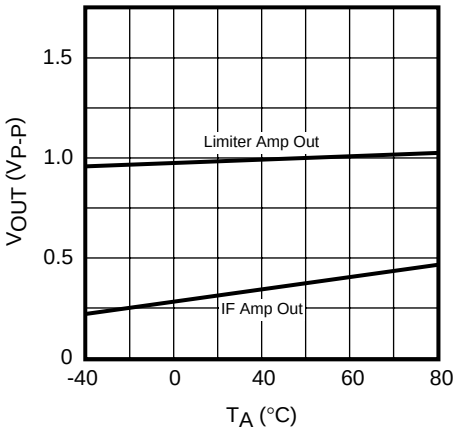

IF OUTPUT LEVEL vs. RF INPUT LEVEL

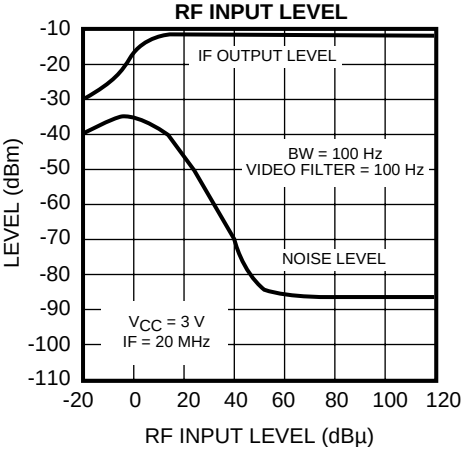

PIN FUNCTION DESCRIPTION

V_{CC} = 3 V, f_{RF} = 20 MHz, f_{OSC} = 19 MHz, Injection Level: -3 dBm, f_{IF} = 1 MHz

PIN NO.	SYMBOL	VOLTAGE	INTERNAL EQUIVALENT CIRCUIT	DESCRIPTION
1	MIXER INPUT	0.95 V	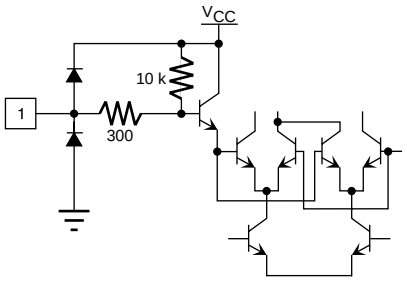	Mixer RF Input Pin The operating frequency range is up to 40 MHz. This pin is internally terminated with a 3 kΩ resistor.
2	MIXER OUTPUT	2.0 V	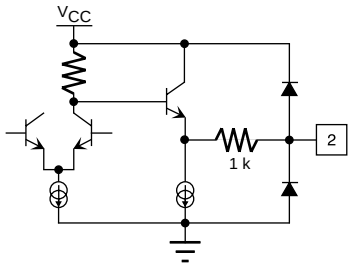	Mixer Output Pin The output impedance is 1 kΩ.
3	GND			GND Pin
4	IF AMP INPUT	2.3 V	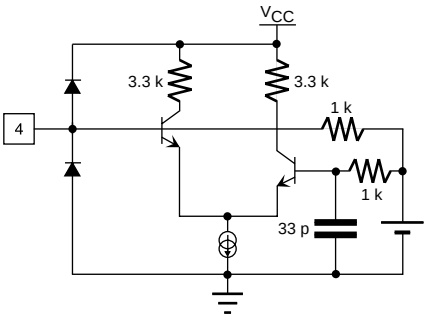	IF Amplifier Input Pin. The input impedance is 1 kΩ. The voltage gain is approximately 28 dB. The IF amplifier frequency range is up to 3 MHz.
5	V_{CC}			Power Supply Pin. The supply voltage range is 2.3 to 5.5 V.
6	IF AMP OUTPUT	2.05 V	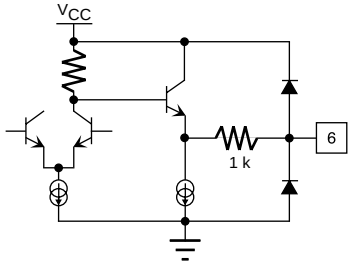	IF Amplifier Output The output impedance is 1 kΩ. The typical level is 300 mV_{P-P}.

PIN FUNCTION DESCRIPTION

V_{CC} = 3 V, f_{RF} = 20 MHz, f_{OSC} = 19 MHz, Injection Level: -3 dBm, f_{IF} = 1 MHz

PIN NO.	SYMBOL	VOLTAGE	INTERNAL EQUIVALENT CIRCUIT	DESCRIPTION
7	LIMITER AMP INPUT	1.85 V	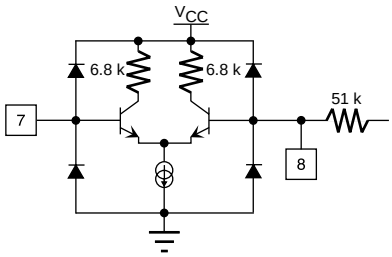	Limiter Amplifier Input Pin. The input impedance is 1 kΩ. The gain of this stage is approximately 70 dB. The limiter frequency range is up to 3 MHz.
8	LIMITER AMP DECOUPLING	1.78 V	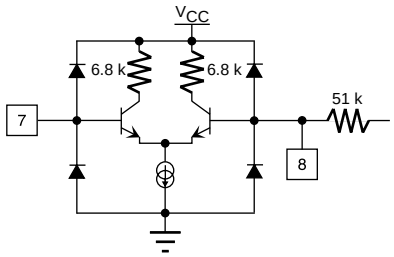	Limiter Amplifier Decoupling Pin. A 0.1 µF decoupling capacitor is connected to this pin.
9	LIMITER AMP OUTPUT	1.89 V	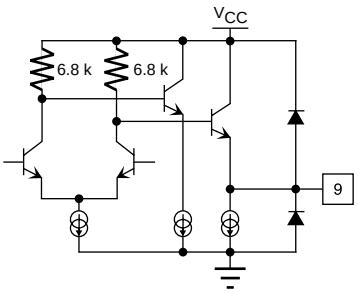	Limiter Amplifier Output Pin. The output impedance is approximately 200 Ω. The typical output level is 1 V_{P-P}. This value is suitable for CMOS interface.
10	REGULATOR OUTPUT		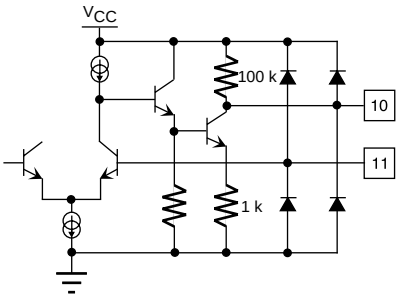	Regulator Control Output Pin. This pin is the regulator's error amplifier output pin. This pin drives the external PNP transistor base.

PIN FUNCTION DESCRIPTION

V_{CC} = 3 V, f_{RF} = 20 MHz, f_{OSC} = 19 MHz, Injection Level: -3 dB, f_{IF} = 1 MHz

PIN NO.	SYMBOL	VOLTAGE	INTERNAL EQUIVALENT CIRCUIT	DESCRIPTION
11	REGULATOR INPUT		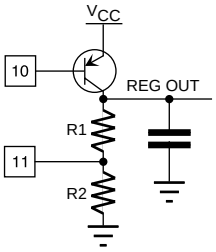	Error Amplifier Input Pin. The reference voltage of the error amplifier is approximately 1 V. Therefore, the regulator's output voltage is determined as follows: V_{OUT} = 1.0 X (R1 + R2)/R2
12	OSC INPUT	2.98 V	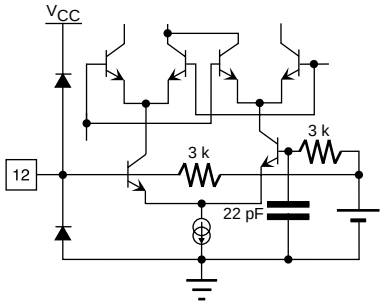	Local Oscillator Input Pin

APPLICATION CIRCUIT

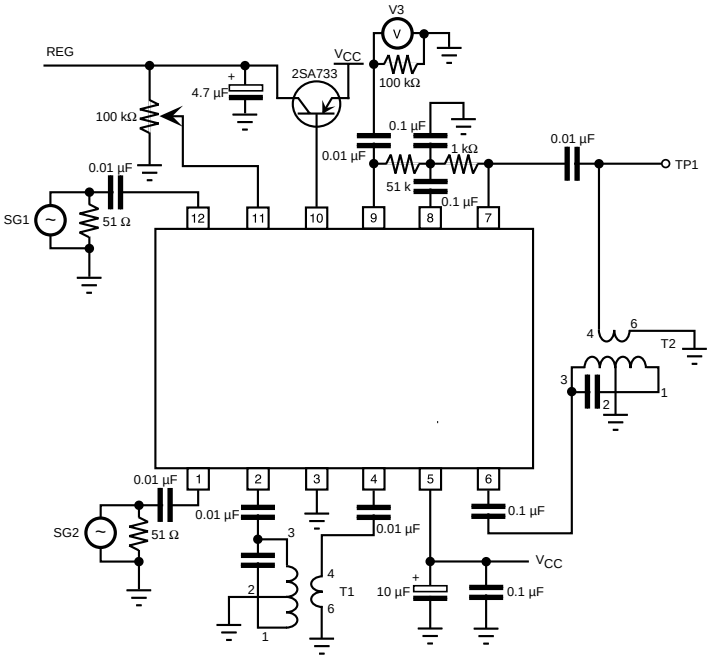

Conditions: V_{CC} = 3 V, T_A = 25 °C

RF Input Frequency	20.1 MHz
Local Input Frequency	19.0 MHz, Inj. Level -5 dBm
IF Frequency	1.1 MHz
V_{CC}	3.0 V

IF Coil Application (T1, T2)

TOKO Part Number		A7LCS-12434N
Center Frequency		1.1 MHz
Internal Capacitor		180 pF
Unloaded Q.		Above 80
Winding	(1-3)	64T.
	(2-3)	11T.
	(4-6)	11T.

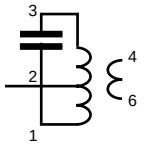

PACKAGE OUTLINE

SSOP-12 (MFP12)

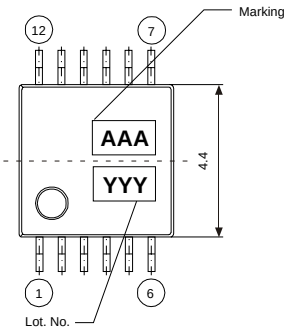

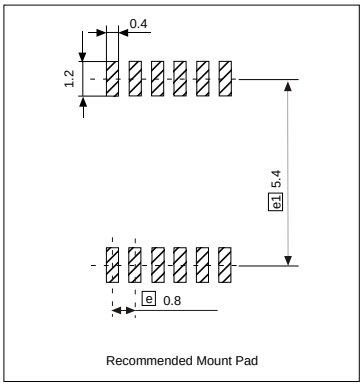

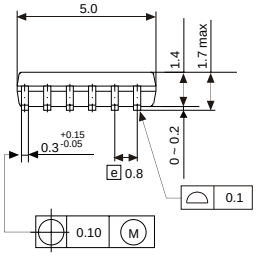

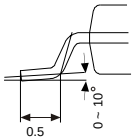

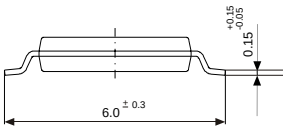

Dimensions are shown in millimeters
Tolerance: x.x = ± 0.2 mm (unless otherwise specified)

Marking Information

TK14600M 600

TOKO

Toko America, Inc. Headquarters
1250 Feehanville Drive, Mount Prospect, Illinois 60056
Tel: (847) 297-0070 Fax: (847) 699-7864

TOKO AMERICA REGIONAL OFFICES

Midwest Regional Office
Toko America, Inc.
1250 Feehanville Drive
Mount Prospect, IL 60056
Tel: (847) 297-0070
Fax: (847) 699-7864

Western Regional Office
Toko America, Inc.
2480 North First Street , Suite 260
San Jose, CA 95131
Tel: (408) 432-8281
Fax: (408) 943-9790

Eastern Regional Office
Toko America, Inc.
107 Mill Plain Road
Danbury, CT 06811
Tel: (203) 748-6871
Fax: (203) 797-1223

Semiconductor Technical Support
Toko Design Center
4755 Forge Road
Colorado Springs, CO 80907
Tel: (719) 528-2200
Fax: (719) 528-2375

Visit our Internet site at http://www.tokoam.com

The information furnished by TOKO, Inc. is believed to be accurate and reliable. However, TOKO reserves the right to make changes or improvements in the design, specification or manufacture of its products without further notice. TOKO does not assume any liability arising from the application or use of any product or circuit described herein, nor for any infringements of patents or other rights of third parties which may result from the use of its products. No license is granted by implication or otherwise under any patent or patent rights of TOKO, Inc.

© 1997 Toko, Inc.
All rights reserved
Printed in the USA

IC-
1299O0.0K