APJA2107PGC PURE GREEN

Features

- 2.1mmx0.7mm RIGHT ANGLE SMT LED, 1.3mm THICKNESS.
- LOW POWER CONSUMPTION.
- WIDE VIEWING ANGLE.
- IDEAL FOR BACKLIGHT AND INDICATOR.
- VARIOUS COLORS AND LENS TYPES AVAILABLE.
- PACKAGE : 2000PCS / REEL.

Description

The Pure Green source color devices are made with Gallium Phosphide Pure Green Light Emitting Diode.

Package Dimensions

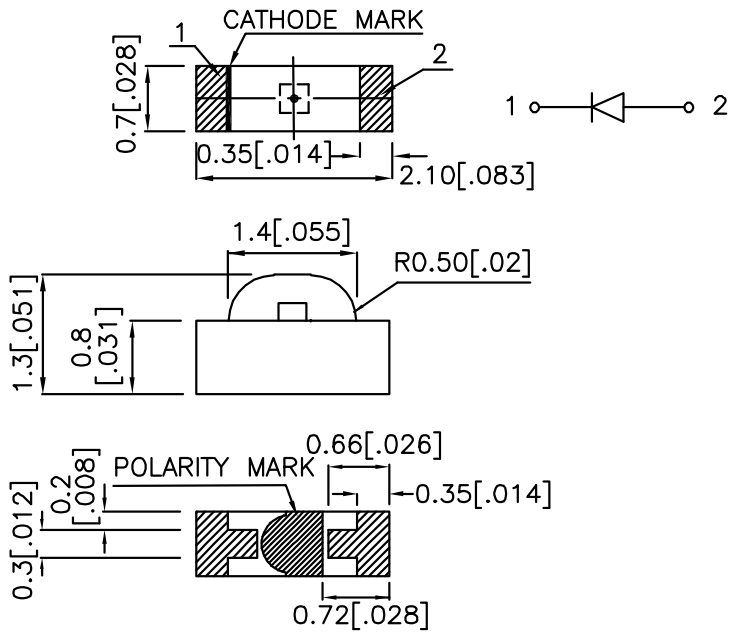

Notes:
1. All dimensions are in millimeters (inches).
2. Tolerance is ± 0.15(0.006") unless otherwise noted.
3. Specifications are subject to change without notice.

Kingbright

Selection Guide

Part No.	Dice	Lens Type	Iv (mcd) @ 20mA		Viewing Angle
			Min.	Typ.	2 θ 1/2
APJA2107PGC	PURE GREEN (GaP)	WATER CLEAR	1.6	5	120°

Note:
1. θ1/2 is the angle from optical centerline where the luminous intensity is 1/2 the optical centerline value.

Electrical / Optical Characteristics at T_A=25°C

Symbol	Parameter	Device	Typ.	Max.	Units	Test Conditions
λpeak	Peak Wavelength	Pure Green	555		nm	I_F=20mA
λD	Dominate Wavelength	Pure Green	555		nm	I_F=20mA
Δλ1/2	Spectral Line Half-width	Pure Green	30		nm	I_F=20mA
C	Capacitance	Pure Green	45		pF	V_F=0V;f=1MHz
V_F	Forward Voltage	Pure Green	2.25	2.5	V	I_F=20mA
I_R	Reverse Current	Pure Green		10	uA	V_R = 5V

Absolute Maximum Ratings at T_A=25°C

Parameter	Pure Green	Units
Power dissipation	105	mW
DC Forward Current	25	mA
Peak Forward Current [1]	135	mA
Reverse Voltage	5	V
Operating/Storage Temperature	-40°C To +85°C	

Note:
1. 1/10 Duty Cycle, 0.1ms Pulse Width.

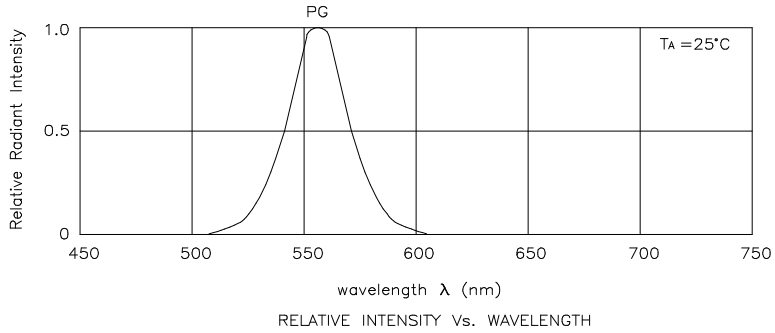

RELATIVE INTENSITY Vs. WAVELENGTH

Pure Green **APJA2107PGC**

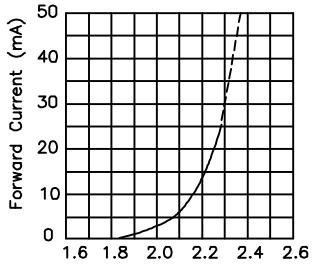

FORWARD CURRENT Vs.
FORWARD VOLTAGE

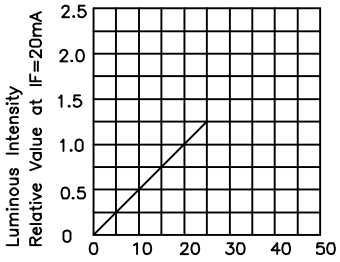

LUMINOUS INTENSITY Vs.
FORWARD CURRENT

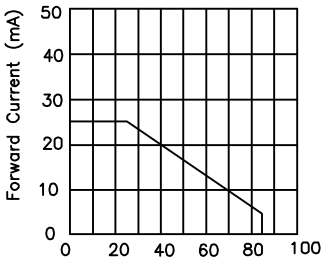

FORWARD CURRENT
DERATING CURVE

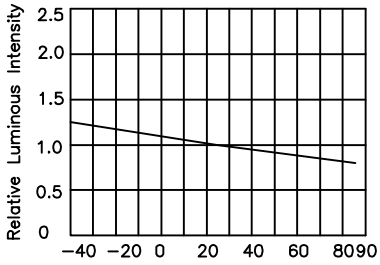

LUMINOUS INTENSITY Vs.
AMBIENT TEMPERATURE

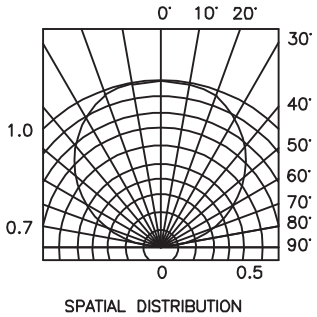

SPATIAL DISTRIBUTION

APJA2107PGC

SMT Reflow Soldering Instructions

Number of reflow process shall be less than 2 times and cooling process to normal temperature is required between first and second soldering process.

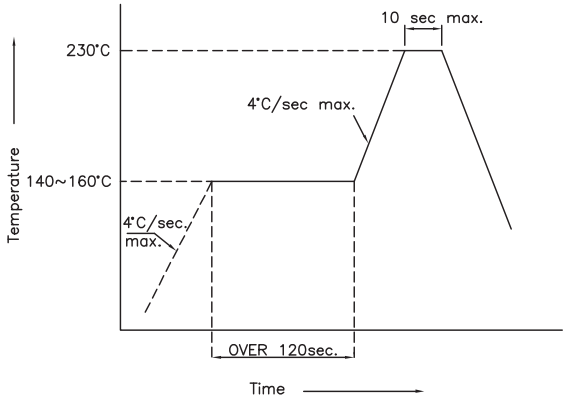

Recommended Soldering Pattern
(Units : mm)

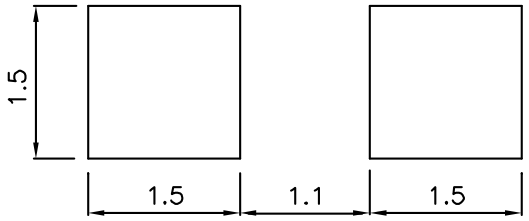
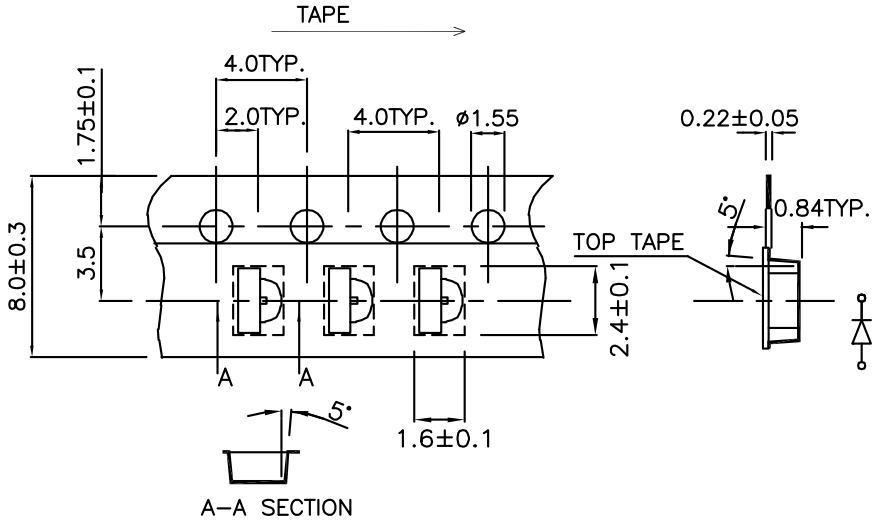
Tape Specifications
(Units : mm)