GE
Sensing & Inspection Technologies

Type YQ Series

Thermometrics RoHS-Compliant PTC Thermistors

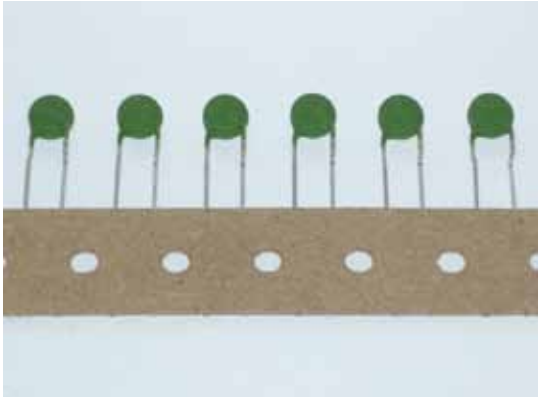

Features

- A range of radially-wired PTC disc thermistors with green silicone resin coating
- Designed for general purpose over-current, over-voltage and direct over-temperature protection
- Wide range of operating current and voltage levels
- Excellent stability
- Fail-safe operation
- Solid state
- High performance barium titanate ceramic
- Suitable for automatic PCB insertion insulated lead wires

Packaging

All types in the YQ range are available loose-packed, as shown in the drawing. Devices are also available on bandolier (tape & reel): types with diameter A<12mm comply with IEC 286-2. To identify the tape & reel packaging required, replace N in the product codes shown in the table as follows:

Bandoliered T

Loose-packed N

Packing Method (Reference Only)

Loose pack (N)

D ≤ 5 mm	2500 PCS/box
5mm< D≤8mm	2000 PCS/box
8mm< D≤10mm	1500 PCS/box
10mm< D≤13mm	750 PCS/box
D> 13mm	500 PCS/box

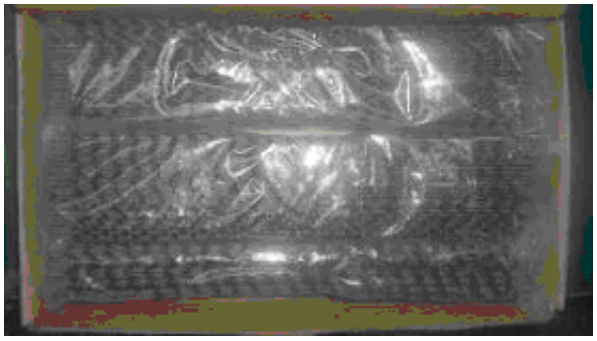

Tape and reel pack (T)

D ≤ 5mm	1500PCS/box	Tape and reel pack form
5mm< D≤8mm	1000PCS/box	Tape and reel pack form
8mm< D≤10mm	750PCS/box	Tape and reel pack form
10mm< D≤13mm	500PCS/box	Tape and reel pack form
D>13mm	375 PCS/box	folding form

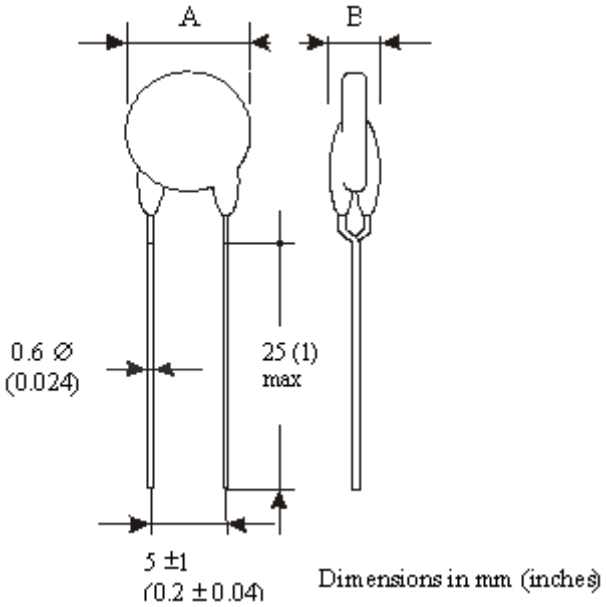

Type TQ Dimensions

Type YQ Specifications

Tolerance on R25
±25%

Ambient temperature range
at maximum voltage 0° to +60°C
at zero voltage -25° to +125°C

Lead wire material
Tin-coated copper Body coating
Green Silicone resin

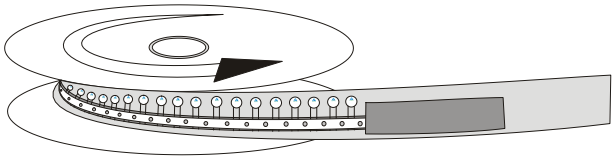

Tape and Reel Form

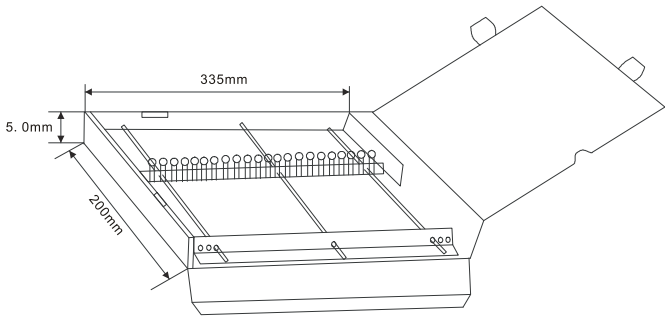

Folding Form

Ordering Information

Group	Code	R25 (Ω)	Int (A)	It (A)	Imo (A)	A max		B max	
						mm	inch	mm	inch
265Vrms Tb=120°C	YQD120N0006	6	0.39	0.78	3.1	17.5	0.69	5	0.2
	YQD120N0010	10	0.25	0.5	1.8	13.5	0.53	5	0.2
	YQD120N0015	15	0.18	0.35	1.2	11	0.43	5	0.2
	YQD120N0025	25	0.13	0.25	0.8	9	0.35	5	0.2
	YQD120N0045	45	0.105	0.2	0.8	9	0.35	5	0.2
	YQD120N0055	55	0.09	0.18	0.8	9	0.35	5	0.2
	YQD120N0070	70	0.065	0.13	0.3	6.5	0.26	5	0.2
	YQD120N0120	120	0.035	0.08	0.3	6.5	0.26	5	0.2
265Vrms Tb=100°C	YQD100N0150	150	0.038	0.08	0.3	6.5	0.26	5	0.2
	YQD100N0300	300	0.027	0.055	0.3	6.5	0.26	5	0.2
	YQD100N0600	600	0.02	0.04	0.2	6.5	0.26	5	0.2
	YQD100N1000	1000	0.015	0.03	0.2	6.5	0.26	5	0.2
265Vrms Tb=80°C	YQD080N0025	25	0.085	0.17	0.8	9	0.35	5	0.2
	YQD080N0050	50	0.06	0.12	1	9	0.35	5	0.2
	YQD080N0100	100	0.05	0.1	0.6	8	0.32	5	0.2
	YQD080N0150	150	0.022	0.045	0.2	4.5	0.18	5	0.2
140Vrms Tb=120°C	YQC120N4.70	4.7	0.425	0.85	3.1	17.5	0.69	5	0.2
	YQC120N5.60	5.6	0.4	0.8	3.1	17.5	0.69	5	0.2
	YQC120N6.80	6.8	0.3	0.6	1.8	13.5	0.53	5	0.2
	YQC120N0010	10	0.225	0.45	1.2	11	0.43	5	0.2
	YQC120N0022	22	0.135	0.27	0.8	9	0.35	5	0.2
	YQC120N0033	33	0.09	0.175	0.3	6.5	0.26	5	0.2
80Vdc 60Vrms Tb=120°C	YQB120N2.30	2.3	0.55	1.1	8	17.5	0.69	4	0.16
	YQB120N3.70	3.7	0.38	0.75	5.5	13.5	0.53	4	0.16
	YQB120N5.60	5.6	0.3	0.6	4.3	11	0.43	4	0.16
	YQB120N9.40	9.4	0.18	0.36	3	9	0.35	4	0.16
	YQB120N0025	25	0.1	0.2	1	6.5	0.26	4	0.16
	YQB120N0055	55	0.06	0.12	0.7	4	0.16	3.5	1.4
30Vrms Tb=120°C	YQA120N1.20	1.2	0.75	1.5	5.5	13.5	0.53	4	0.16
	YQA120N1.8L	1.8	0.5	1	5.5	13.5	0.53	4	0.16
	YQA120N1.80	1.8	0.55	1	3	9	0.35	4	0.16
	YQA120N4.2	4.2	0.28	0.56	3	9	0.35	4	0.16
	YQA120N0010	10	0.17	0.34	1	6.5	0.26	4	0.16
18Vrms Tb=120°C	YQZ120N1.00	1	0.65	1.2	3	9	0.35	4	0.16
	YQZ120N1.20	1.2	0.7	1.4	4.3	11	0.43	4	0.16
	YQZ120N1.80	1.8	0.55	1	3	9	0.35	4	0.16
	YQZ120N4.60	4.6	0.3	0.58	1	6.5	0.26	4	0.16
	YQZ120N0013	13	0.14	0.28	0.7	4.5	0.18	4	0.16

V_{max}	Maximum operating voltage	R_{25}	Resistance at 25°C
T_b	Switching temperature	I_{mo}	Maximum overload current
I_{nt}	Maximum current without tripping (25°C ambient)	I_t	Minimum trip current (25°C ambient)

www.gesensinginspection.com

920-510A

© 2010 General Electric Company. All Rights Reserved. Specifications are subject to change without notice. GE is a registered trademark of General Electric Company. Other company or product names mentioned in this document may be trademarks or registered trademarks of their respective companies, which are not affiliated with GE.

Mouser Electronics

Authorized Distributor

Click to View Pricing, Inventory, Delivery & Lifecycle Information:

GE Measurement & Control:

YQS5814 YQD120N0015