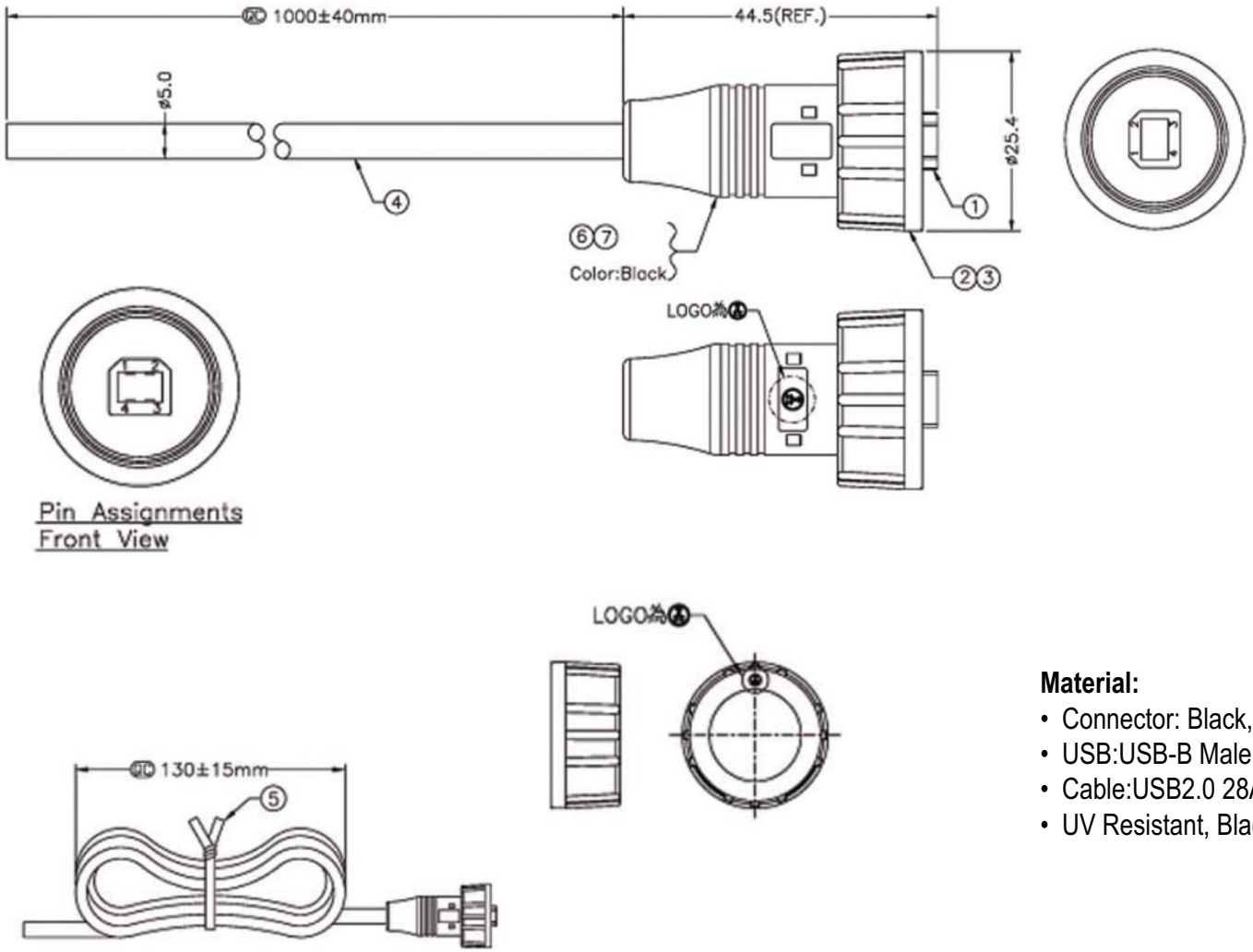

Material:

- Connector: Black, ABS
- USB:USB-B Male Solder
- Cable:USB2.0 28AWG*1P+24AWG*2C+AL.My+D+B
- UV Resistant, Black, OD=5.0mm, IP+67

Unit: MM

Scale	1:1							Name
TOLERANCE						Drawn	11.07.11	Chappell
X.X	±0.40					Approved		
X.XX	±0.25							
X.XXX	±0.15							
Angle	±3°							
			Modification	Date	Name			

RoHS Complaint

ASSMANN WSW components

Item No. **A-KAB-USBB-MS-1M-R**

Title Waterproof USB B Male Connector, w/Cable, 1M, Open End

Drawing No.

rev00

Replace

Sheet