SPECIFICATIONS

Mounting: Either Front or Behind Panel
Temperature Range: -94°f to +400°F
Shelf-Life: in excess of 25 years
Material: Stainless steel with bonded silicone rubber conforms to A-A-59588 Class 3
Resistant To: Salt spray, sunlight, ozone, weather, fungus, and most acids and lurbricating oils

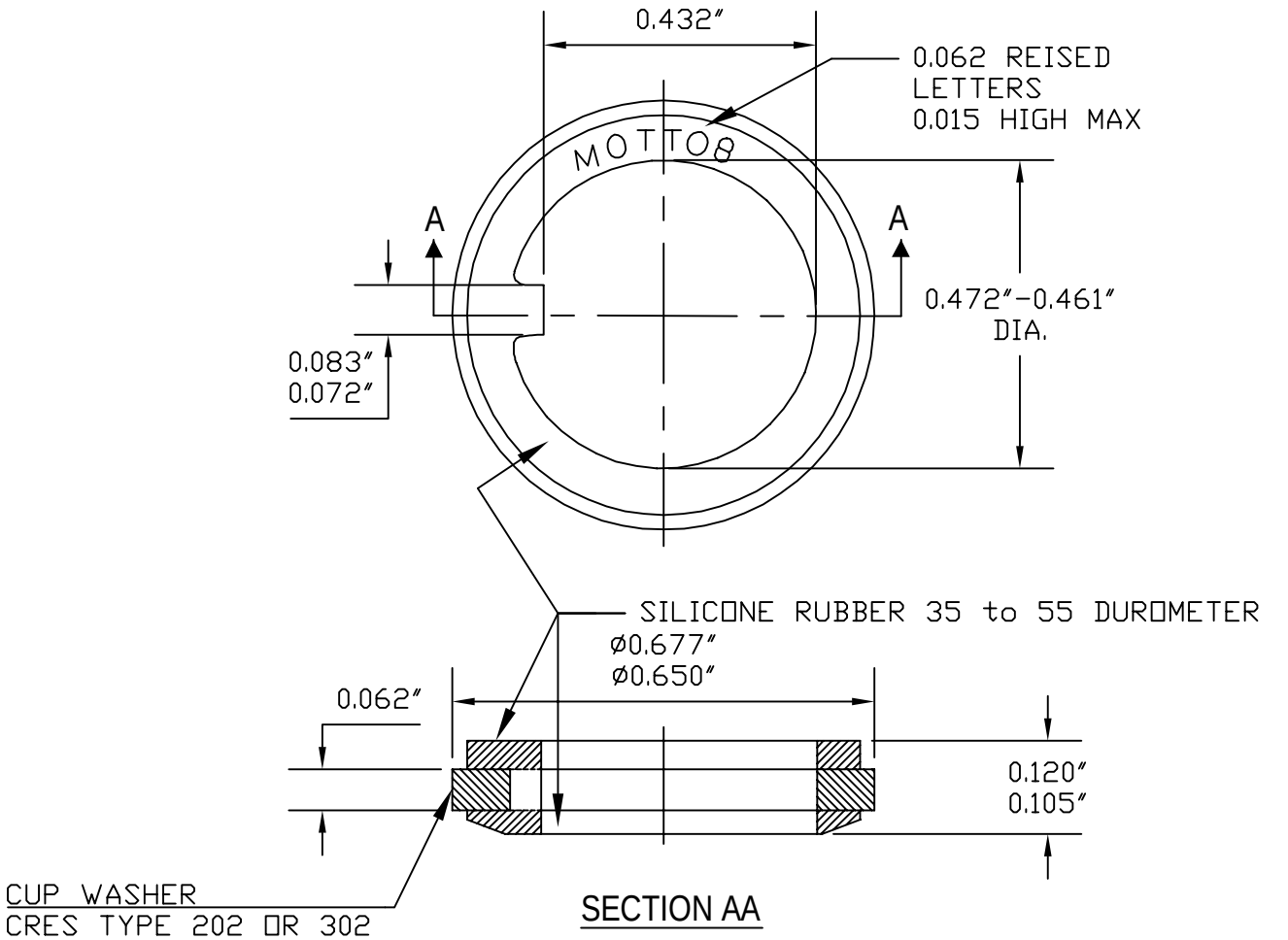

REV.	DESCRIPTION		DATE
B	REDRAWN and MAT'L CHANGED	S. GOK	05.19.09
A	CAD COMPUTER GENERATED		01.10.03

MAXIMUM AND MINIMUM MEASUREMENTS ARE STATED DIRECTLY ON EACH DIMENSION.	TITLE: PANEL BUSHING SEAL FOR SEALED SWITCHES/CIRCUIT BREAKERS	ENG.	
		DWN.	
MAT'L: GRAY SILICONE RUBBER		CHKD. J.CELLA	05.19.09
FINISH: S.S. WASHER	APM-HEXSEAL CORPORATION	SCALE NONE	DWG. NO. 60064

THIS DRAWING COVERS PROPRIETARY ITEM AND IS THE PROPERTY OF THE APM-HEXSEAL CORPORATION.
THIS DRAWING IS NOT TO BE COPIED OR USED WITHOUT THE WRITTEN APPROVAL OF AN OFFICER OF THE APM-HEXSEAL CORPORATION.

Mouser Electronics

Authorized Distributor

Click to View Pricing, Inventory, Delivery & Lifecycle Information:

APM HEXSEAL:
60064