# MOTOR SPEED CONTROL CIRCUIT

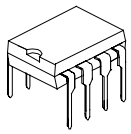

DIP-8

## DESCRIPTION

The UTC6650 is a monolithic integrated circuit designed for the tape recorder.

## FEATURES

*Wide operating supply voltage:Vcc=1.8V- 7V
*Few external components
*Easy Speed control mode

## BLOCK DIAGRAM

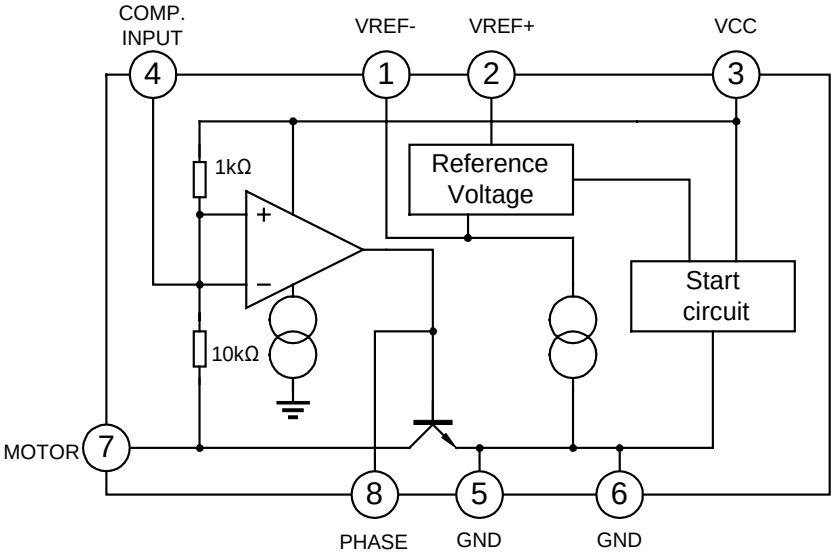

## ABSOLUTE MAXIMUM RATINGS(Ta=25°C)

| Characteristic | Symbol | Value | Unit |
|---|---|---|---|
| Supply Voltage | $V_{CC}$ | 7.5 | V |
| Terminal Voltage | Vn(n=1,2,3,4) | -0.5~7.5 | V |
| Terminal 8 Voltage | $V_8$ | -0.5~1 | V |
| Supply Current | Icc | 1000 | mA |
| Terminal 7 Current | $I_7$ | 1000 | mA |
| Power Dissipation | $P_D$ | 750 | mW |
| Operating Temperature | Topr | -20 ～ +70 | °C |
| Storage Temperature | Tstg | -40 ～ +150 | °C |

## ELECTRICAL CHARACTERISTICS

**(Ta=25°C,$V_{CC}$=6V,f=1kHz,unless otherwise specified)**

| Characteristic | Symbol | Test Conditions | Min | Typ | Max | Units | Test circuit |
|---|---|---|---|---|---|---|---|
| Quiescent Circuit Current | $I_{CC}$ | $V_{CC}$=3V | | 2 | 3 | mA | 1 |
| Reference Voltage | $V_{REF}$ | $V_{CC}$=3V，R2-1>10kΩ | 1.20 | 1.28 | 1.35 | V | 4 |
| Start Voltage | $V_{CC(S)}$ | 30mA current flow to Ra | | 1.0 | 1.2 | V | 2 |
| Saturation Voltage | $V_{SAT}$ | $V_{CC}$=1.8V,Ra=4.7Ω | | 0.2 | 0.5 | V | 2 |
| Reference Voltage Characteristics | $\frac{\Delta VREF}{VREF} / \Delta VCC$ | $V_{CC}$=1.8V~7.0V | -1.25 | 0.1 | 1.25 | %/V | 1 |
| Output Voltage Characteristics | $\frac{\Delta VA}{VA} / \Delta VCC$ | $V_{CC}$=1.8V~7.0V | -1.2 | 0.1 | 1.2 | %/V | 3 |
| Reference Voltage Current Characteristics | $\frac{\Delta VREF}{VREF} / \Delta I7$ | $I_7$=1mA~20mA | -0.2 | 0.01 | 0.2 | %/mA | 4 |
| Reference Voltage Temperature Characteristics | $\frac{\Delta VREF}{VREF} / \Delta TA$ | $T_A$=-20~+60°C, $V_{CC}$=3.0V | | 0.01 | | %/°C | 4 |

**TEST CIRCUIT**

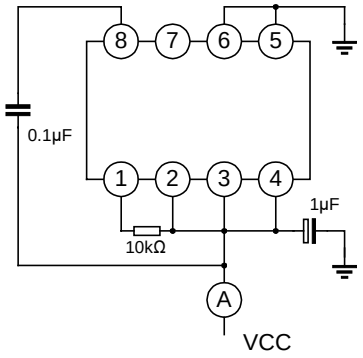


**Fig.1**

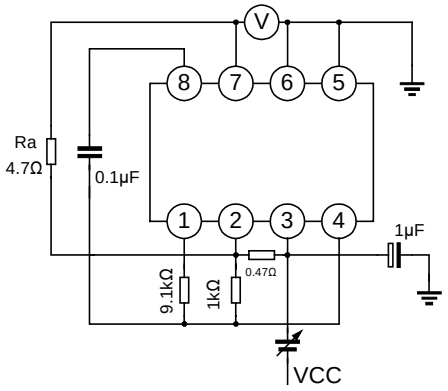


**Fig.2**

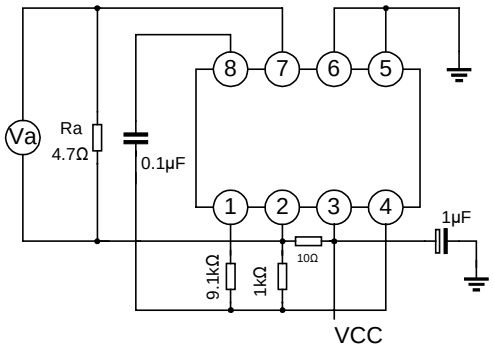


**Fig.3**

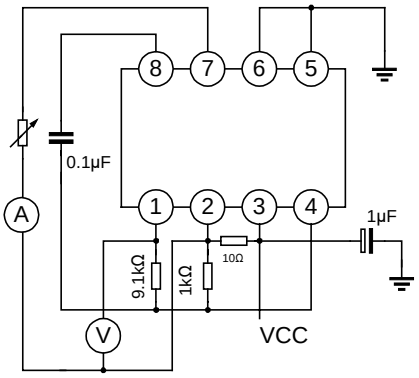


**Fig.4**

**APPLICATION CIRCUIT**