The product information in this catalog is for reference only. Please request the Engineering Drawing for the most current and accurate design information.
All non-RoHS products have been discontinued, or will be discontinued soon. Please check the products status on the Hirose website RoHS search at www.hirose-connectors.com, or contact your Hirose sales representative.

SC Type Fixed Attenuators

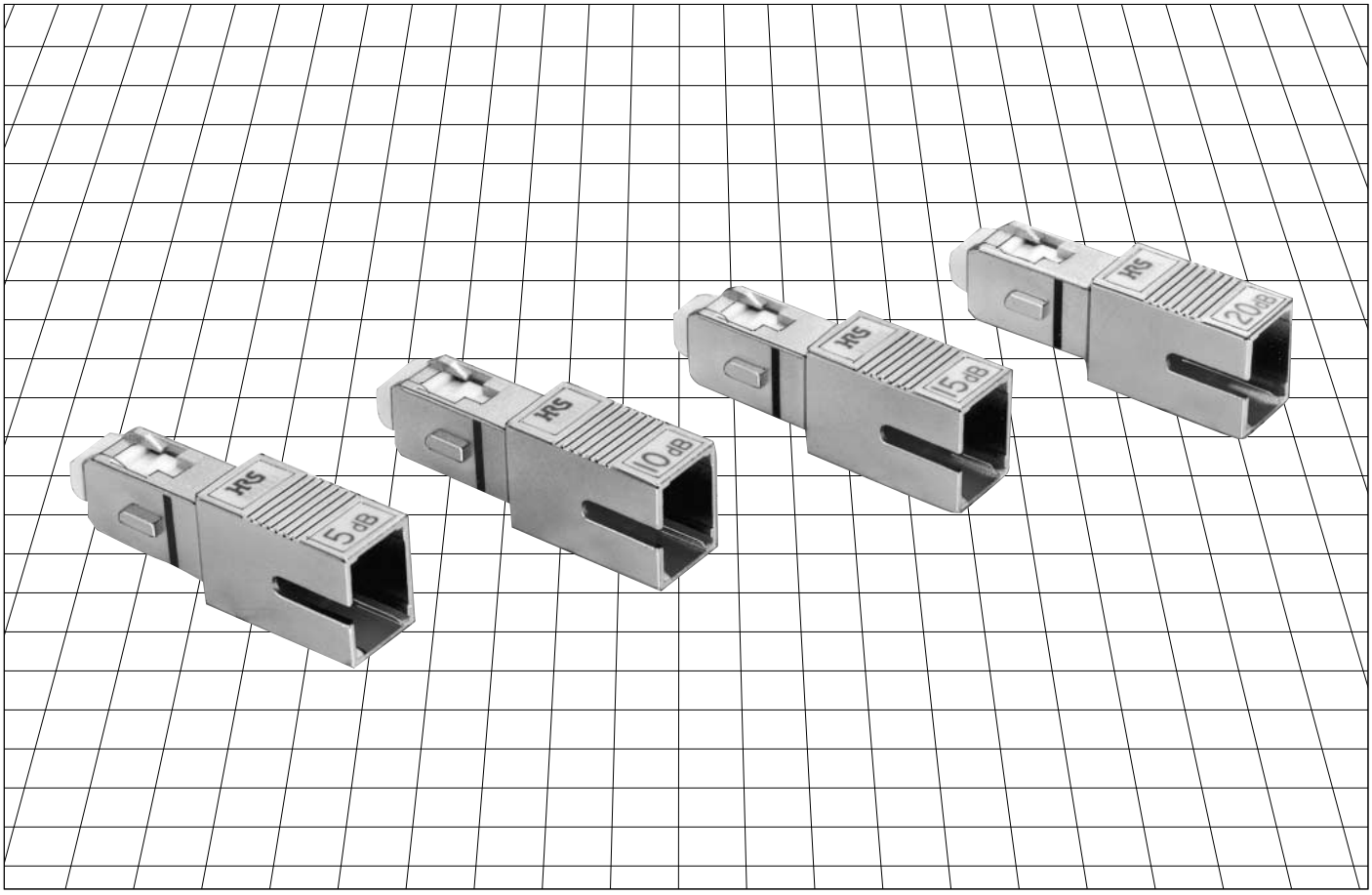

■Features

1. Maximum input power for SM : 250mW
2. Attenuaton level : 0,1,2,3,4,5,6,7,8,9,10,11,12,13,14,15,16,20,25,30 dB
3. Dual wavelengths : 1310 nm and 1550 nm
4. User friendly push-pull mechanism
5. Please contact us if you have any requests. Hirose will offer excellent solutions to meet your requirements.

■Applications

Power level adjustment of optical fiber communication networks.

The product information in this catalog is for reference only. Please request the Engineering Drawing for the most current and accurate design information.
All non-RoHS products have been discontinued, or will be discontinued soon. Please check the products status on the Hirose website RoHS search at www.hirose-connectors.com, or contact your Hirose sales representative.

■Product Specifications

●High Power SC-Type Fixed Attenuator (Max. input power: 250mW)

Ratings	Operating temperature range	-40°C to +75°C	Storage temperature range	-40°C to +85°C
	Max. Input Power	250mW	Fiber type	SM

Item		Test Method	Requirments
Optical Characteristis	Attenuation	Measurement at a point within wavelength of 1310 ± 30 nm and a point within wavelength of 1550 ± 30 nm.	0+0.4db
			1,2±0.5dB
			3,4,5,6±0.6dB
			7,8,9,10,11,12,13,14±ATT×10%dB
			15,16,20,25±1.5dB
			30±2.5dB
	Return Loss		≧40dB
	Power test	Power : 250mw, Time : 100 hours Laser : LD(wavelength : 1470nm)	Change in attenuation : ±0.2dB
Mechanical Characteristis	Engagement and separation forces	Engagement and separation forces at 50mm/s.	Engagement force: ≦19.6 N Separation force: ≦19.6 N
	Gauge retention force	Zirconia gauge at ϕ2.499 ± 0.0005 mm.	2.0N to 3.9N
	Mating durability	Insertion and extraction number : 500	1) Attenuation and return loss shall be satisfild before and after the test. 2) No breakage,crack or looseness on components.
	Vibration	3 hours at an amplitude of 1.5mm.with the frequency range 10 to 55Hz. In each of three mutually perpendicular plane.	
	Flex test	8.82N load,100 cycles Telcordia GR-910-CORE	
	Twist test	13.23N load,10 cycles Telcordia GR-910-CORE	
	Side test	12.25N load,90° angle,active Telcordia GR-910-CORE	
	Impact test	3 times in each of three mutually perpendicular axis with the Acceleration 981m/s²	
Environmental Characteristis	Compasite Temparature-humidity Cyclic test	Humidity : 90% to 96% Temperature : -10°C to 65°C, Time : 480 hours(20 Cyclic)	
	Temperature cycling	Temp : -40→-40→80→80→80 to -40°C Time : 60→ 180 →60→ 180 min Cyclic : 100 cycles	
	Dry heat-high Temparature endurance	Temperature : 85°C Time : 500 hours	
	Cold	Temperature : -40°C Time : 500 hours	
	Salt Mist	Salt Mist : 5% Time : 48 hours	No significant corrosion.

■Materials

Part	Material
Body	Zinc alloy
Ferrule	Zirconia
Split sleeve	Zirconia

■Ordering Information

HSC - AT 11 K - A **

❶ ❷ ❸ ❹ ❺ ❻

❶ Series name : HSC	❹ Polishing code K : AdPC (≧40dB)
❷ Attenuator	❺ Optical fiber type A : Single Mode
❸ Specification series	❻ Attenuation : 00,01,02,03,04,05,06,07,08,09, 10,11,12,13,14,15,16,20,25,30

The product information in this catalog is for reference only. Please request the Engineering Drawing for the most current and accurate design information.
All non-RoHS products have been discontinued, or will be discontinued soon. Please check the products status on the Hirose website RoHS search at www.hirose-connectors.com, or contact your Hirose sales representative.

●High Power SC-Type Fixed Attenuator (Max. input power: 250mW)

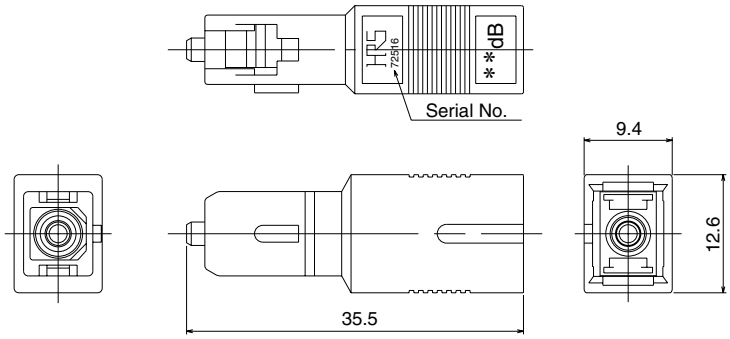

Part Number	CL No.	Attenuation	Attenuation Tolerance	Return Loss	Wavelength	Split Sleeve	Fiber type
HSC-AT11K-A00	820-6001-6	0dB	+0.4dB	≧40dB	1310nm 1550nm	Zirconia	SM
HSC-AT11K-A01	820-6002-9	1dB	±0.5dB				
HSC-AT11K-A02	820-6003-1	2dB	±0.5dB				
HSC-AT11K-A03	820-6004-4	3dB	±0.6dB				
HSC-AT11K-A04	820-6005-7	4dB	±0.6dB				
HSC-AT11K-A05	820-6006-0	5dB	±0.6dB				
HSC-AT11K-A06	820-6007-2	6dB	±0.6dB				
HSC-AT11K-A07	820-6013-5	7dB	±0.7dB				
HSC-AT11K-A08	820-6014-8	8dB	±0.8dB				
HSC-AT11K-A09	820-6015-0	9dB	±0.9dB				
HSC-AT11K-A10	820-6008-5	10dB	±1.0dB				
HSC-AT11K-A11	820-6016-3	11dB	±1.1dB				
HSC-AT11K-A12	820-6017-6	12dB	±1.2dB				
HSC-AT11K-A13	820-6018-9	13dB	±1.3dB				
HSC-AT11K-A14	820-6019-1	14dB	±1.4dB				
HSC-AT11K-A15	820-6009-8	15dB	±1.5dB				
HSC-AT11K-A16	820-6020-0	16dB	±1.5dB				
HSC-AT11K-A20	820-6010-7	20dB	±1.5dB				
HSC-AT11K-A25	820-6011-0	25dB	±1.5dB				
HSC-AT11K-A30	820-6012-2	30dB	±2.5dB				

The product information in this catalog is for reference only. Please request the Engineering Drawing for the most current and accurate design information.
All non-RoHS products have been discontinued, or will be discontinued soon. Please check the products status on the Hirose website RoHS search at www.hirose-connectors.com, or contact your Hirose sales representative.

SC-Type Optical Fixed Attenuators

HSC-AT11U Series

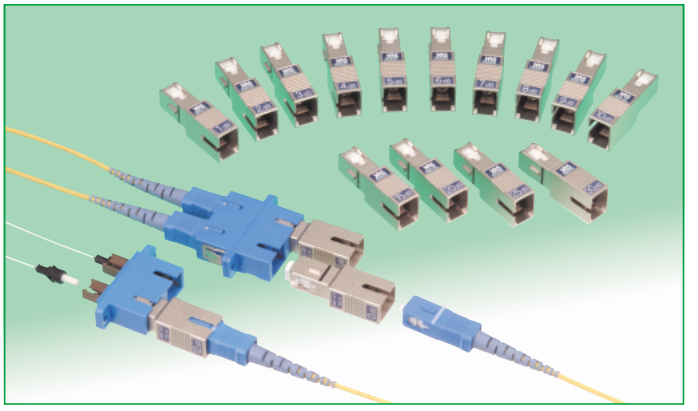

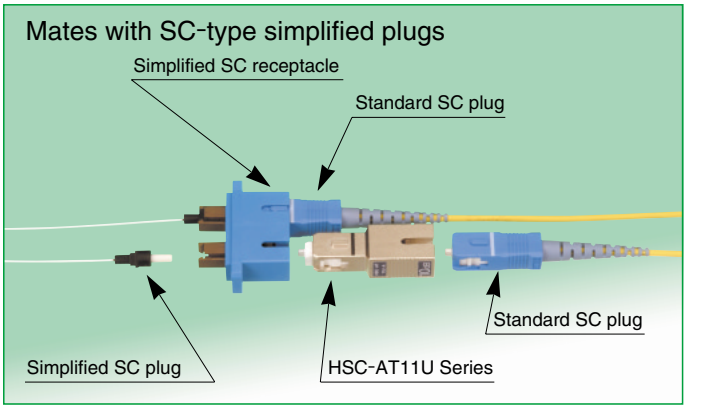

Features

1. **Low return loss, 50 dB min.***
2. **Complies with Telcordia GR-910-CORE.**
3. **SC-type simplified plugs**
   Mates with the spring-less (ferrule-fastened) SC-type simplified plugs.
4. **In-line mating with a standard SC connectors**
5. **High input power (250 mW max.)**
6. **Variety of fixed attenuation levels.**
   1 to 16 dB (in 1 dB increments), 20, 25, and 30 dB

Applications

Optical communication and data transfer equipment requiring in-line fixed power level adjustment.

* Standard return loss. Contact Hirose Electric sales representative if better return loss.is required.

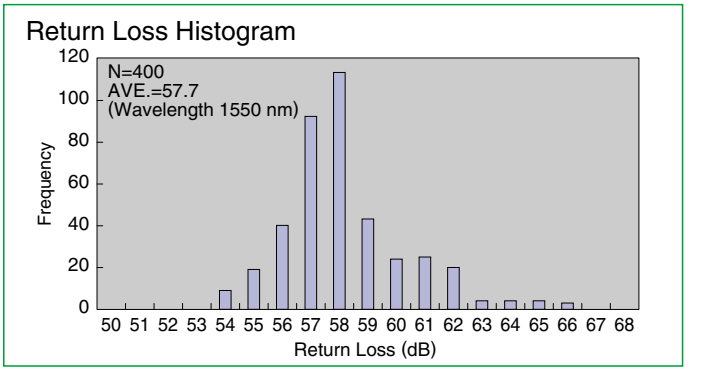

Ordering Information

HSC-AT-11-U-A-**

❶ ❷ ❸ ❹ ❺ ❻

❶ Series name: HSC	❹ Polishing code	U: UPC (>=50dB)	
❷ Attenuator	❺ Optical fiber type	A: Single Mode	
❸ Specification series	❻ In-line mating with a standard SC connectors	:00, 01, 02, 03, 04, 05, 06, 07, 08,09, 10, 11, 12, 13, 14, 15, 16, 20, 25, 30	

Part Number	CL No.	Attenuation	Attenuation Tolerance	Return Loss	Wavelength	Split Sleeve	Fiber Type
HSC-AT11U-A00	820-9500-2	0dB	+0.4dB	≧50dB	1310nm 1550nm	Zirconia	SM
HSC-AT11U-A01	820-9501-5	1dB	±0.5dB				
HSC-AT11U-A02	820-9502-8	2dB	±0.5dB				
HSC-AT11U-A03	820-9503-0	3dB	±0.6dB				
HSC-AT11U-A04	820-9504-3	4dB	±0.6dB				
HSC-AT11U-A05	820-9505-6	5dB	±0.6dB				
HSC-AT11U-A06	820-9506-9	6dB	±0.6dB				
HSC-AT11U-A07	820-9507-1	7dB	±0.7dB				
HSC-AT11U-A08	820-9508-4	8dB	±0.8dB				
HSC-AT11U-A09	820-9509-7	9dB	±0.9dB				
HSC-AT11U-A10	820-9510-6	10dB	±1.0dB				
HSC-AT11U-A11	820-9511-9	11dB	±1.1dB				
HSC-AT11U-A12	820-9512-1	12dB	±1.2dB				
HSC-AT11U-A13	820-9513-4	13dB	±1.3dB				
HSC-AT11U-A14	820-9514-7	14dB	±1.4dB				
HSC-AT11U-A15	820-9515-0	15dB	±1.5dB				
HSC-AT11U-A16	820-9516-2	16dB	±1.5dB				
HSC-AT11U-A20	820-9517-5	20dB	±1.5dB				
HSC-AT11U-A25	820-9518-8	25dB	±1.5dB				
HSC-AT11U-A30	820-9519-0	30dB	±2.5dB				

The product information in this catalog is for reference only. Please request the Engineering Drawing for the most current and accurate design information.
All non-RoHS products have been discontinued, or will be discontinued soon. Please check the products status on the Hirose website RoHS search at www.hirose-connectors.com, or contact your Hirose sales representative.

■Specifications

Rating	Operating temperature range	-40℃ to +75℃	Max. input power	250 mW
	Storage temperature range	-40℃ to +75℃	Fiber type	SMF

Characteristic		Test Method (Conforms with Telcordia GR-910-CORE)	Specification
Optical characteristic	Attenuation	Measurement at a point within the wavelength of 1310 ±30 nm and a point within the wavelength of 1550 ±30 nm.	Refer to the various types of attenuation tolerance (the previous page).
	Return loss		50 dB min.
	Rated input power	Power : 250mW(LD) Wavelength : 1470nm Duration : 100 hours	After / during test, changing in attenuation(fluctuation)shall be less than ±0.1dB.
Environmental characteristic	Controlled Operating Environment	Temperature : -5℃ to 50℃ Duration : 182.5 hours Humidity : 15% to 90%	1) After test, change in attenuation(fluctuation)and return loss shall be as follows. 1, 2, and 3 dB : within (Nominal attenuation value x0.15) dB Other attenuations : within 0.5 dB ・Return loss : 50 dB min. 2) No breakage, crack or dislocation of components.
	Uncontrolled Operating Environment	Temperature : -40℃ to 75℃ Period of 1 cycle : 8 hours Number of cycles : 21	
	Non-Operating Environment	Low-Temperature Exposure and Thermal Shock Temperature : 23℃ → 40℃ → -40℃ → 23℃ Duration : 2.1h 72 h 4 min. minimum	
		High-Temperture Exposure and Thermal Shock Temperature : 23℃ → 70℃ → 70℃ → 23℃ Duration : 1.6h 72 h 5 min. minimum	
		High Relative Humidity Exposure Temperature : 23℃ → 40℃ → 40℃ → 23℃ Duration : 0.6h 96 h 0.6h Humidity : 90% to 95%	
	Humidity/Condensation Cycling Test	Temperature : -10℃ to 65℃ Period of 1 cycle : 12 hours Humidity : 90% to 100% Number of cycles : 14	
	Water Immersion	Temperature : 43℃ Duration : 168 hours Solution : PH 5.5	
Mechanical characteristics	Vibration	Vibration frequency range : 10 to 55 Hz Maximum amplitude: 1.52 mm Duration : 2 hours in each of 3 directions	
	Side Pull Load	Bend angle : 90° Load : 1.25 kg	1) After /during test, change in attenuation(fluctuation)and return loss shall be as follows. 1, 2, and 3 dB : within (Nominal attenuation value x0.15) dB Other attenuations : within 0.5 dB ・Return loss : 50 dB min. 2) No breakage, crack or dislocation of components.
	Cable Retention	Load : 2 kg	1) After test, change in attenuation(fluctuation)and return loss shall be as follows. 1, 2, and 3 dB : within (Nominal attenuation value x0.15) dB Other attenuations : within 0.5 dB ・Return loss : 50 dB min. 2) No breakage, crack or dislocation of components.
	Durability	Insertion/withdrawal cycles : 200	
	Impact Test	Drop onto a concrete floor from a height of 1.8 m. Cycles: 8 times in each of 3 directions	

■Materials and Dimensions

Component	Material
Body	Zinc alloy
Ferrule	Zirconia
Split sleeve	Zirconia

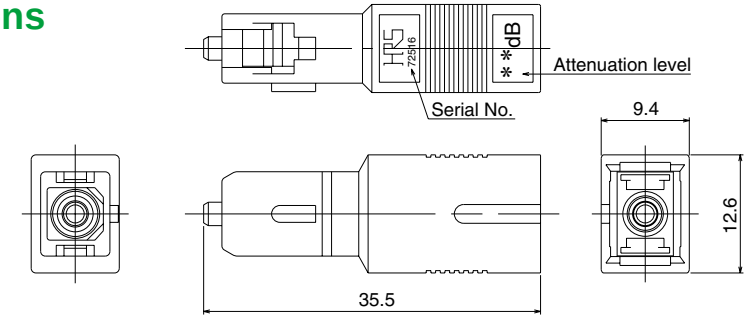

HIROSE ELECTRIC CO.,LTD.
5-23,OSAKI 5-CHOME,SHINAGAWA-KU,TOKYO 141-8587,JAPAN
PHONE: 81-3-3491-9741, FAX: 81-3-3493-2933
http://www.hirose.com
http://www.hirose-connectors.com

Mouser Electronics

Authorized Distributor

Click to View Pricing, Inventory, Delivery & Lifecycle Information:

Hirose Electric:
HSC-AT11K-A05 HSC-AT11K-A15 HSC-AT11K-A20 HSC-AT11U-A05 HSC-AT11U-A10 HSC-AT11U-A15 HSC-AT11U-A20 HSC-AT11K-A03 HSC-AT11U-A03 HSC-AT11U-A07 HSC-AT11K-A07