REVISIONS					
REV	ECO	DESCRIPTION	DATE	BY	APPR
A3	-	RELEASE NEW DRAWING FORMAT	08/08/13	DRP	-

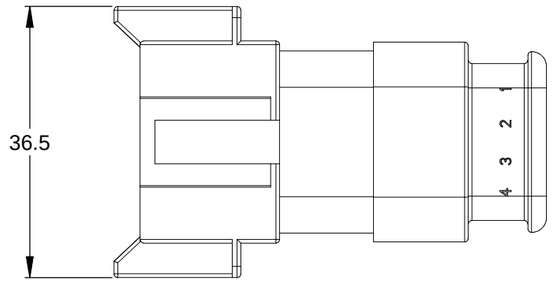

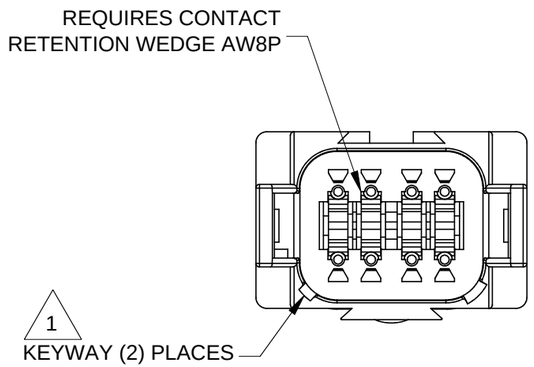

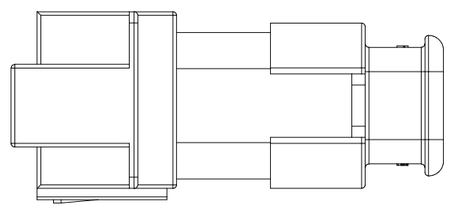

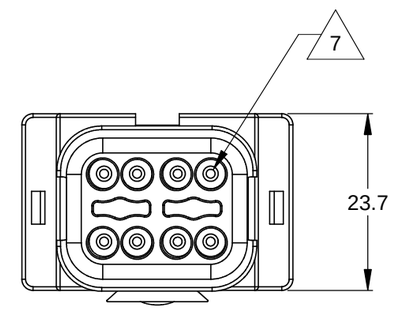

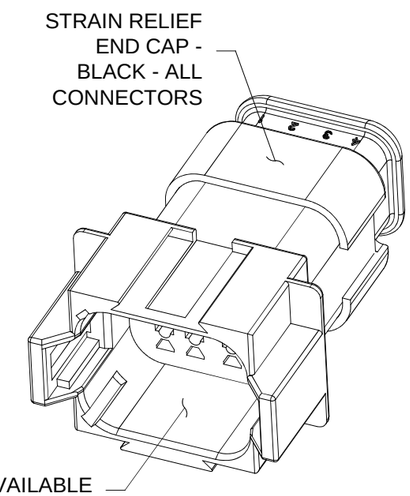

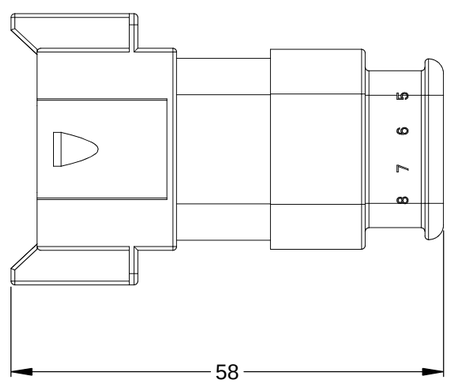

NOTES: UNLESS OTHERWISE SPECIFIED

1. SEE SHEET 2 FOR KEY ARRANGEMENTS AND COLORS.

2. MATERIAL:
   HOUSING: THERMOPLASTIC
   SEAL: SILICONE RUBBER

3. MODIFICATIONS: STRAIN RELIEF END CAP

4. SPECIFICATIONS:
   4.1 CURRENT RATING: 13 AMPS
   4.2 OPERATING TEMPERATURE: -55°C TO +125°C
   4.3 DIELECTRIC WITHSTANDING VOLTAGE: LESS THAN 2 MILLIAMPS CURRENT LEAKAGE @ 1500 VOLTS AC.
   4.4 INSULATION RESISTANCE: 1000 MEGOHMS MIN @ 25°C.
   4.5 MOISTURE RESISTANCE: IP67 (MATED CONDITION)
   4.6 MATING CYCLE DURABILITY: 100 CYCLES
   4.7 RoHS COMPLIANT

5. MATING PART: AT06-08SX* PLUG
   (X = A,B,C,D KEYS; * = MODIFICATIONS AND COLORS)

6. ALL DIMENSIONS ARE FOR REFERENCE USE ONLY.

7. CONTACT SIZE AND REAR SEAL WIRE RANGE:

CONTACT SIZE	MIN. INSUL O.D.	MAX. INSUL O.D.	TYPICAL WIRE RANGE
16	2.24 mm (.088 in)	3.68 mm (.145 in)	14 - 20 AWG

QUANTITY	PART NUMBER	DESCRIPTION	ITEM
	SEE SHEET 2		

MATERIALS LIST

UNLESS OTHERWISE SPECIFIED
1) All dimensions are in metric(mm).
2) Tolerances are as follows:
1 PL DEC ±0.30 | Fractions ±1/64
2 PL DEC ±0.15 | Angles ±1°
3 PL DEC ±0.08
3) Note reference = X

MATERIAL SPECIFICATIONS:

PROCESS SPECIFICATIONS:

NEXT ASS'Y:

SIGNATURES		DATE
DRAWN:	D.PARKS	08/08/13
CHECKED:		
ENGINEER:		
APPROVAL:		
CUSTOMER:		

THIS DRAWING IS SUPPLIED FOR INFORMATION ONLY. DESIGN FEATURES, SPECIFICATIONS AND PERFORMANCE DATA SHOWN HEREON ARE THE PROPERTY OF THE AMPHENOL CORPORATION. NO RIGHTS OF REPRODUCTION ARE IMPLIED. ALL DIMENSIONS ARE SUBJECT TO NORMAL MANUFACTURING VARIATIONS.

SINE Systems Corporation
A Subsidiary of Amphenol Corporation
44724 Morley Drive
Clinton Township, MI 48036

RECEPTACLE, 8 PIN, AT SERIES,
KEYED, STRAIN RELIEF END CAP

SIZE	FSCM NO.	DWG NO:	REVISION
B	—	C- AT04-08PX-SRXXX	A3

SCALE: NONE SHEET 1 OF 2

TITLE: RECEPTACLE,8 PIN,AT SERIES,KEYED,STRAIN RELIEF END CAP
DWG NO: C- AT04-08PX-SRXXX
REV: A3
SH: 1
OF: 2

REVISIONS					
REV	ECO	DESCRIPTION	DATE	BY	APPR

P/N AT04-08PA-SRGRY
KEY-A CONFIGURATION
STANDARD COLOR: GREY

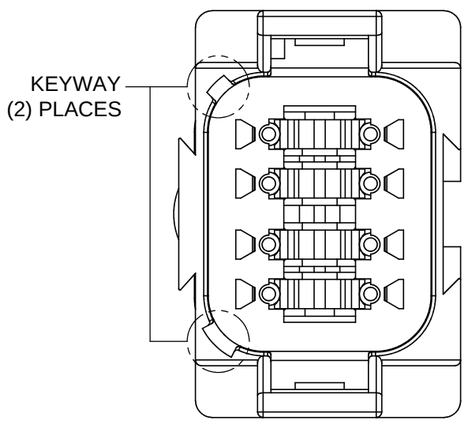

KEY-A CONFIGURATION	
COLOR	PART NUMBER
***GREY**	**AT04-08PA-SRGRY**
BLACK	AT04-08PA-SRBK
GREEN	AT04-08PA-SRGN
BROWN	AT04-08PA-SRBR

P/N AT04-08PB-SRBK
KEY-B CONFIGURATION
STANDARD COLOR: BLACK

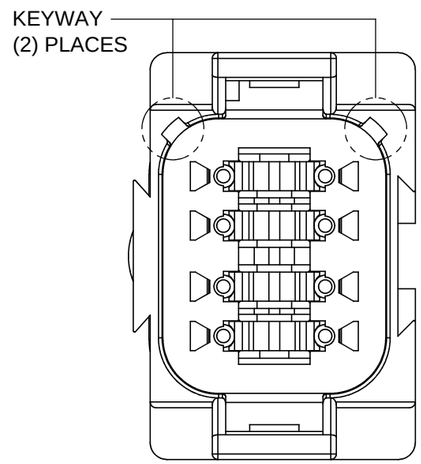

KEY-B CONFIGURATION	
COLOR	PART NUMBER
GREY	AT04-08PB-SRGRY
***BLACK**	**AT04-08PB-SRBK**
GREEN	AT04-08PB-SRGN
BROWN	AT04-08PB-SRBR

P/N AT04-08PC-SRGN
KEY-C CONFIGURATION
STANDARD COLOR: GREEN

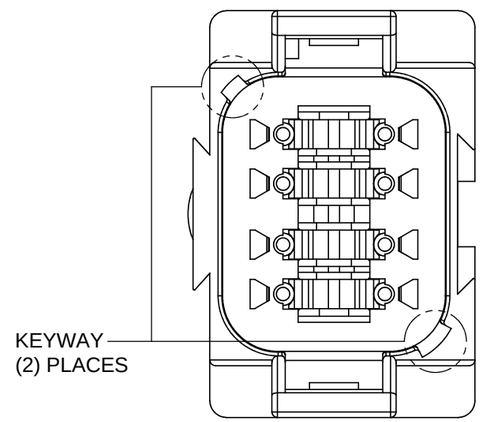

KEY-C CONFIGURATION	
COLOR	PART NUMBER
GREY	AT04-08PC-SRGRY
BLACK	AT04-08PC-SRBK
***GREEN**	**AT04-08PC-SRGN**
BROWN	AT04-08PC-SRBR

P/N AT04-08PD-SRBR
KEY-D CONFIGURATION
STANDARD COLOR: BROWN

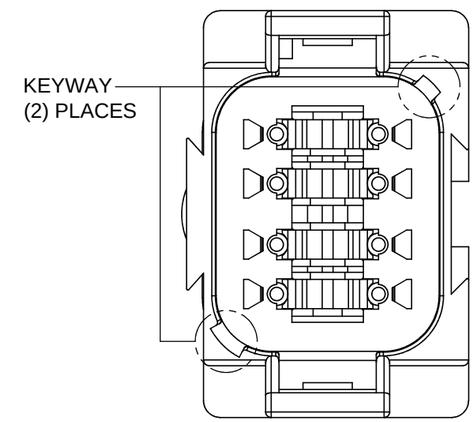

KEY-D CONFIGURATION	
COLOR	PART NUMBER
GREY	AT04-08PD-SRGRY
BLACK	AT04-08PD-SRBK
GREEN	AT04-08PD-SRGN
***BROWN**	**AT04-08PD-SRBR**

NOTE:

AN ASTERISKS (*) PLACED BEFORE THE COLOR DENOTES THE STANDARD MOLDED COLOR OF THE CONNECTORS SHOWN ABOVE. STRAIN RELIEF END CAPS ARE AVAILABLE IN BLACK ONLY.

OTHER COLORS SHOWN ARE AVAILABLE VIA SPECIAL ORDER.

QUANTITY	PART NUMBER	DESCRIPTION	ITEM
	MATERIALS LIST		

UNLESS OTHERWISE SPECIFIED
1) All dimensions are in metric(mm).
2) Tolerances are as follows:
1 PL DEC ±0.30 | Fractions ±1/64
2 PL DEC ±0.15 | Angles ±1°
3 PL DEC ±0.08
3) Note reference = X

MATERIAL SPECIFICATIONS:

PROCESS SPECIFICATIONS:

NEXT ASS'Y:

SIGNATURES		DATE
DRAWN:	D.PARKS	08/08/13
CHECKED:		
ENGINEER:		
APPROVAL:		
CUSTOMER:		

THIS DRAWING IS SUPPLIED FOR INFORMATION ONLY. DESIGN FEATURES, SPECIFICATIONS AND PERFORMANCE DATA SHOWN HEREON ARE THE PROPERTY OF THE AMPHENOL CORPORATION. NO RIGHTS OF REPRODUCTION ARE IMPLIED. ALL DIMENSIONS ARE SUBJECT TO NORMAL MANUFACTURING VARIATIONS.

SINE Systems Corporation
A Subsidiary of Amphenol Corporation
44724 Morley Drive
Clinton Township, MI 48036

RECEPTACLE, 8 PIN, AT SERIES,
KEYED, STRAIN RELIEF END CAP

SIZE	FSCM NO.	DWG NO:	REVISION
B	—	C- AT04-08PX-SRXXX	A3

SCALE: NONE SHEET 2 OF 2

TITLE: RECEPTACLE,8 PIN,AT SERIES,KEYED,STRAIN RELIEF END CAP
DWG NO: C- AT04-08PX-SRXXX
REV: A3
SH: 2
OF: 2

Mouser Electronics

Authorized Distributor

Click to View Pricing, Inventory, Delivery & Lifecycle Information:

Amphenol:
AT04-08PA-SRGRY