Dual Processor Supervisors with Watchdog

ADM13305

FEATURES

Dual supervisory circuits
Supply voltage range of 2.7 V to 5.5 V
Pretrimmed threshold options: 1.8 V, 2.5 V, 3.3 V, and 5 V
Adjustable 0.6 V voltage reference
Maximum supply current of 40 µA
140 ms (minimum) reset timeout
Watchdog timer with 1.6 sec (typical) timeout
RESET valid from $V_{DD} \geq 1.1$ V
Push-pull RESET and $\overline{\text{RESET}}$ outputs
8-lead, narrow body SOIC package
Temperature range: −40°C to +85°C

APPLICATIONS

Supervising DSPs/microcontrollers
Industrial and portable equipment
Wireless systems
Notebook/desktop computers

GENERAL DESCRIPTION

The ADM13305 is a dual voltage supervisor designed to monitor two supplies and provide a reset signal to DSP and microprocessor-based systems.

There are five models available, all of which feature a combination of internally pretrimmed undervoltage threshold options for monitoring 1.8 V, 2.5 V, 3.3 V, and 5 V supplies. There is also an adjustable input option with an undervoltage threshold voltage of 0.6 V.

The ADM13305-18, ADM13305-25, and ADM13305-33 models have two internally fixed thresholds. The ADM13305-4 and ADM13305-5 offer one internally fixed threshold and one externally programmable threshold via a resistor string. See the Ordering Guide for a list of all available options.

During power-up, $\overline{\text{RESET}}$ is asserted when the supply voltage exceeds 1.1 V. The device then monitors the SENSEv input pins and holds the $\overline{\text{RESET}}$ output low as long as either of the SENSEv inputs remains below the rising threshold voltage, V_{IT+}.

Once the supplies monitored at the SENSEv inputs rise above their associated thresholds, the reset signal remains low for the reset timeout period before deasserting. Subsequently, if a voltage monitored by the SENSEv pins falls below its associated falling threshold, V_{IT-}, the $\overline{\text{RESET}}$ output asserts. The ADM13305 features both an active high RESET and an active low $\overline{\text{RESET}}$ output.

FUNCTIONAL BLOCK DIAGRAMS

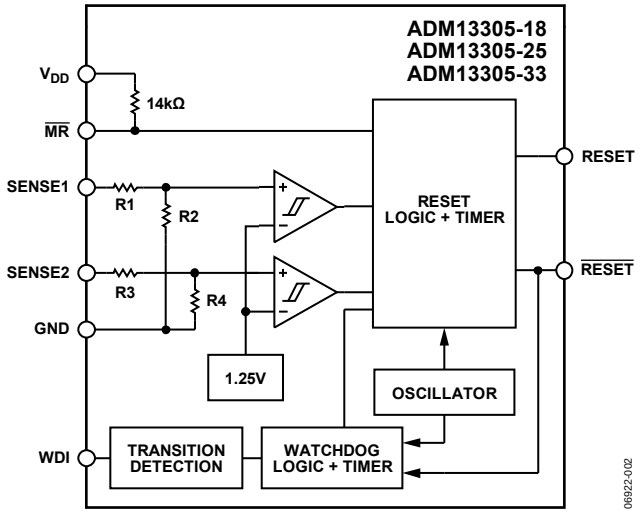

Figure 1.

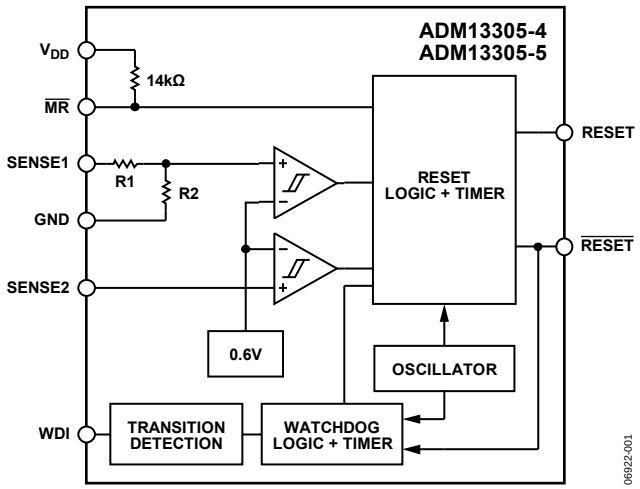

Figure 2. .

As well as providing power-on reset signals, an on-chip watchdog timer can reset the microprocessor if it fails to strobe within the preset timeout period. A reset signal can also be asserted by an external push button through the manual reset input pin.

The ADM13305 is available in an 8-lead, narrow body SOIC package. The device operates over the extended industrial temperature range of −40°C to +85°C.

Rev. 0
Information furnished by Analog Devices is believed to be accurate and reliable. However, no responsibility is assumed by Analog Devices for its use, nor for any infringements of patents or other rights of third parties that may result from its use. Specifications subject to change without notice. No license is granted by implication or otherwise under any patent or patent rights of Analog Devices. Trademarks and registered trademarks are the property of their respective owners.

One Technology Way, P.O. Box 9106, Norwood, MA 02062-9106, U.S.A.
Tel: 781.329.4700 **www.analog.com**
Fax: 781.461.3113
©2007 Analog Devices, Inc. All rights reserved.

TABLE OF CONTENTS

Features 1
Applications 1
General Description 1
Functional Block Diagrams 1
Revision History 2
Specifications 3
  Timing Requirements 5
  Switching Characteristics 5
  Functional Truth Table 5
Absolute Maximum Ratings 6
  Thermal Resistance 6
  ESD Caution 6
Pin Configuration and Function Descriptions 7
Typical Performance Characteristics 8
Theory of Operation 10
  Input Configuration 10
  Reset Output 10
  Watchdog Timer 10
  Manual Reset ($\overline{MR}$) 11
Outline Dimensions 12
  Ordering Guide 12

REVISION HISTORY

8/07—Revision 0: Initial Version

SPECIFICATIONS

V_{DD} = 2.7 V to 5.5 V, −40°C ≤ T_A ≤ +85°C, unless otherwise noted.

Table 1. ADM13305-18, ADM13305-25, and ADM13305-33

Parameter	Min	Typ	Max	Unit	Test Conditions/Comments
OPERATING VOLTAGE RANGE, V_{DD}	2.7		5.5	V	
SUPPLY CURRENT, I_{DD}			40	µA	
INPUT CAPACITANCE, C_I		10		pF	V_I = 0 V to V_{DD}
RESET, $\overline{\text{RESET}}$ OUTPUT					
High Level Output Voltage, V_{OH}	V_{DD} − 0.2			V	I_{OH} = −20 µA
	V_{DD} − 0.4			V	I_{OH} = −2 mA, V_{DD} = 3.3 V
	V_{DD} − 0.4			V	I_{OH} = −3 mA, V_{DD} = 5.5 V
Low Level Output Voltage, V_{OL}			0.2	V	I_{OL} = 20 µA
			0.4	V	I_{OL} = 2 mA, V_{DD} = 3.3 V
			0.4	V	I_{OL} = 3 mA, V_{DD} = 5.5 V
Power-Up Reset Voltage[1]			0.4	V	I_{OL} = 20 µA, V_{DD} ≥ 1.1 V
SENSE INPUTS					
Falling Threshold Voltage, V_{IT-}	1.64	1.68	1.72	V	T_A = 0°C to 85°C
	2.20	2.25	2.30	V	T_A = 0°C to 85°C
	2.86	2.93	3.00	V	T_A = 0°C to 85°C
	4.46	4.55	4.64	V	T_A = 0°C to 85°C
	1.64	1.68	1.73	V	T_A = −40°C to +85°C
	2.20	2.25	2.32	V	T_A = −40°C to +85°C
	2.86	2.93	3.02	V	T_A = −40°C to +85°C
	4.46	4.55	4.67	V	T_A = −40°C to +85°C
Hysteresis at SENSEv Inputs, V_{HYS}		15		mV	V_{IT-} = 1.68 V
		20		mV	V_{IT-} = 2.25 V
		30		mV	V_{IT-} = 2.93 V
		40		mV	V_{IT-} = 4.55 V
WDI					
Average High Level Input Current, $I_{H(AV)}$		100	150	µA	WDI = V_{DD} = 5.5 V
Average Low Level Input Current, $I_{L(AV)}$		−15	−20	µA	WDI = 0 V, V_{DD} = 5.5 V
INPUT VOLTAGE AT $\overline{\text{MR}}$ AND WDI					
High Level, V_{IH}	0.7 × V_{DD}			V	
Low Level, V_{IL}			0.3 × V_{DD}	V	
INPUT TRANSITION RISE AND FALL RATE AT $\overline{\text{MR}}$			50	ns/V	
HIGH LEVEL INPUT CURRENT, I_H					
WDI		120	170	µA	WDI = V_{DD} = 5.5 V
$\overline{\text{MR}}$		−130	−180	µA	$\overline{\text{MR}}$ = 0.7 × V_{DD}, V_{DD} = 5.5 V
SENSE1		5	8	µA	SENSE1 = V_{DD} = 5.5 V
SENSE2		6	9	µA	SENSE2 = V_{DD} = 5.5 V
LOW LEVEL INPUT CURRENT, I_L					
WDI		−120	−170	µA	WDI = 0 V, V_{DD} = 5.5 V
$\overline{\text{MR}}$		−430	−600	µA	$\overline{\text{MR}}$ = 0 V, V_{DD} = 5.5 V
SENSEv	−1		+1	µA	SENSE1, SENSE2 = 0 V

[1] The lowest supply voltage at which $\overline{\text{RESET}}$ becomes active. t_r, V_{DD} ≥ 15 µs/V.

V_{DD} = 2.7 V to 5.5 V, −40°C ≤ T_A ≤ +85°C, unless otherwise noted.

Table 2. ADM13305-4 and ADM13305-5

Parameter	Min	Typ	Max	Unit	Test Conditions/Comments
OPERATING VOLTAGE RANGE, V_{DD}	2.7		5.5	V	
SUPPLY CURRENT, I_{DD}			40	µA	
INPUT CAPACITANCE, C_I		10		pF	V_I = 0 V to V_{DD}
RESET, $\overline{\text{RESET}}$ OUTPUT					
High-Level Output Voltage, V_{OH}	V_{DD} − 0.2			V	I_{OH} = −20 µA
	V_{DD} − 0.4			V	I_{OH} = −2 mA, V_{DD} = 3.3 V
	V_{DD} − 0.4			V	I_{OH} = −3 mA, V_{DD} = 5.5 V
Low-Level Output Voltage, V_{OL}			0.2	V	I_{OH} = 20 µA
			0.4	V	I_{OH} = 2 mA, V_{DD} = 3.3 V
			0.4	V	I_{OH} = 3 mA, V_{DD} = 5.5 V
Power-Up Reset Voltage[1]			0.4	V	I_{OH} = 20 µA, V_{DD} ≥ 1.1 V
SENSEv INPUTS					
Falling Input Threshold Voltage, V_{IT-}	0.5952	0.6	0.6048	V	T_A = −40°C to +85°C
	2.23	2.25	2.29	V	T_A = −40°C to +85°C
	2.90	2.93	2.98	V	T_A = −40°C to +85°C
Hysteresis at SENSEv Inputs, V_{HYS}		0		mV	V_{IT-} = 0.6 V
		20		mV	V_{IT-} = 2.25 V
		30		mV	V_{IT-} = 2.93 V
WDI					
Average High Level Input Current, $I_{H(AV)}$		100	150	µA	WDI = V_{DD} = 5.5 V
Average Low Level Input Current, $I_{L(AV)}$		−15	−20	µA	WDI = 0 V, V_{DD} = 5.5 V
INPUT VOLTAGE AT $\overline{\text{MR}}$ AND WDI					
High Level, V_{IH}	0.7 × V_{DD}			V	
Low Level, V_{IL}			0.3 × V_{DD}	V	
INPUT TRANSITION RISE AND FALL RATE AT $\overline{\text{MR}}$			50	ns/V	
HIGH LEVEL INPUT CURRENT, I_H					
WDI		120	170	µA	WDI = V_{DD} = 5.5 V
$\overline{\text{MR}}$		−130	−180	µA	$\overline{\text{MR}}$ = 0.7 × V_{DD}, V_{DD} = 5.5 V
SENSE1		5	8	µA	SENSE1 = V_{DD} = 5.5 V
SENSE2	−50		+50	nA	SENSE2 = V_{DD} = 5.5 V
LOW LEVEL INPUT CURRENT, I_L					
WDI		−120	−170	µA	WDI = 0 V, V_{DD} = 5.5 V
$\overline{\text{MR}}$		−430	−600	µA	$\overline{\text{MR}}$ = 0 V, V_{DD} = 5.5 V
SENSEv	−1		+1	µA	SENSE1, SENSE2 = 0 V

[1] The lowest supply voltage at which $\overline{\text{RESET}}$ becomes active. t_r, V_{DD} ≥ 15 µs/V.

TIMING REQUIREMENTS

V_{DD} = 2.7 V to 5.5 V, R_L = 1 MΩ, C_L = 50 pF, T_A = 25°C.

Table 3. ADM13305-18, ADM13305-25 and ADM13305-33

Parameter	Min	Typ	Max	Unit	Test Conditions/Comments
PULSE WIDTH (t_w)					
SENSEv	6			µs	$V_{SENSEvL} = V_{IT-} - 0.3$ V, $V_{SENSEvH} = V_{IT+} + 0.3$ V
$\overline{MR}$	100			ns	$V_{IH} = 0.7 \times V_{DD}$, $V_{IL} = 0.3 \times V_{DD}$
WDI	100			ns	$V_{IH} = 0.7 \times V_{DD}$, $V_{IL} = 0.3 \times V_{DD}$

Table 4. ADM13305-4 and ADM13305-5

Parameter	Min	Typ	Max	Unit	Test Conditions/Comments
PULSE WIDTH (t_w)					
SENSEv		30		µs	$V_{SENSEvL} = V_{IT-} - 0.3$ V, $V_{SENSEvH} = V_{IT+} + 0.3$ V
$\overline{MR}$	100			ns	$V_{IH} = 0.7 \times V_{DD}$, $V_{IL} = 0.3 \times V_{DD}$
WDI	100			ns	$V_{IH} = 0.7 \times V_{DD}$, $V_{IL} = 0.3 \times V_{DD}$

SWITCHING CHARACTERISTICS

V_{DD} = 2.7 V to 5.5 V, R_L = 1 MΩ, C_L = 50 pF, T_A = 25°C.

Table 5. ADM13305-18, ADM13305-25 and ADM13305-33

Parameter	Min	Typ	Max	Unit	Test Conditions/Comments
Watchdog Timeout ($t_{t(OUT)}$)	1.1	1.6	2.3	sec	$V_{I(SENSEv)} \geq V_{IT+} + 0.2$ V, $\overline{MR} \geq 0.7 \times V_{DD}$
Delay Time (t_d)	140	200	280	ms	$V_{I(SENSEv)} \geq V_{IT+} + 0.2$ V, $\overline{MR} \geq 0.7 \times V_{DD}$
Propagation Delay, High-to-Low, $\overline{MR}$ to RESET[1]/$\overline{RESET}$ (t_{PHL})		200	500	ns	$V_{I(SENSEv)} \geq V_{IT+} + 0.2$ V, $V_{IH} \geq 0.7 \times V_{DD}$, $V_{IL} \geq 0.3 \times V_{DD}$
Propagation Delay, Low-to-High, $\overline{MR}$ to RESET/$\overline{RESET}$[1] (t_{PLH})		200	500	ns	$V_{I(SENSEv)} \geq V_{IT+} + 0.2$ V, $V_{IH} \geq 0.7 \times V_{DD}$, $V_{IL} \geq 0.3 \times V_{DD}$
Propagation Delay, High-to-Low, SENSEv to RESET[1]/$\overline{RESET}$ (t_{PHL})		1	5	µs	$V_{IH} = V_{IT+} + 0.3$ V, $V_{IL} = V_{IT-} - 0.3$ V, $\overline{MR} \geq 0.7 \times V_{DD}$
Propagation Delay, Low-to-High, SENSEv to RESET/$\overline{RESET}$[1] (t_{PLH})		1	5	µs	$V_{IH} = V_{IT+} + 0.3$ V, $V_{IL} = V_{IT-} - 0.3$ V, $\overline{MR} \geq 0.7 \times V_{DD}$

[1] The reset timeout delay of 200 ms masks the propagation delay.

Table 6. ADM13305-4 and ADM13305-5

Parameter	Min	Typ	Max	Unit	Test Conditions/Comments
Watchdog Timeout ($t_{t(out)}$)	1.1	1.6	2.3	sec	$V_{I(SENSEv)} \geq V_{IT+} + 0.2$ V, $\overline{MR} \geq 0.7 \times V_{DD}$
Delay Time (t_d)	140	200	280	ms	$V_{I(SENSEv)} \geq V_{IT+} + 0.2$ V, $\overline{MR} \geq 0.7 \times V_{DD}$
Propagation Delay, High-to-Low, $\overline{MR}$ to RESET[1]/$\overline{RESET}$ (t_{PHL})		200	500	ns	$V_{I(SENSEv)} \geq V_{IT+} + 0.2$ V, $V_{IH} \geq 0.7 \times V_{DD}$, $V_{IL} \geq 0.3 \times V_{DD}$
Propagation Delay, Low-to-High, $\overline{MR}$ to RESET/$\overline{RESET}$[1] (t_{PLH})		200	500	ns	$V_{I(SENSEv)} \geq V_{IT+} + 0.2$ V, $V_{IH} \geq 0.7 \times V_{DD}$, $V_{IL} \geq 0.3 \times V_{DD}$
Propagation Delay, High-to-Low, SENSEv to RESET[1]/$\overline{RESET}$ (t_{PHL})		30		µs	$V_{IH} = V_{IT+} + 0.3$ V, $V_{IL} = V_{IT-} - 0.3$ V, $\overline{MR} \geq 0.7 \times V_{DD}$
Propagation Delay, Low-to-High, SENSEv to RESET/$\overline{RESET}$[1] (t_{PLH})		30		µs	$V_{IH} = V_{IT+} + 0.3$ V, $V_{IL} = V_{IT-} - 0.3$ V, $\overline{MR} \geq 0.7 \times V_{DD}$

[1] The reset timeout delay of 200 ms masks the propagation delay.

FUNCTIONAL TRUTH TABLE

Table 7.

$\overline{MR}$	SENSE1 > V_{IT1}	SENSE2 > V_{IT2}	$\overline{RESET}$	RESET
L	X[1]	X[1]	L	H
H	0	0	L	H
H	0	1	L	H
H	1	0	L	H
H	1	1	H	L

[1] X = don't care.

ABSOLUTE MAXIMUM RATINGS

Table 8.

Parameter	Rating
Supply Voltage Range, V_{DD}	−0.3 V to +6 V
$\overline{MR}$, WDI	−0.3 V to V_{DD} + 0.3 V
SENSE1, SENSE2	(V_{DD} + 0.3 V)V_{IT}/V_{REF}
RESET, $\overline{RESET}$	−0.3 V to +6 V
Maximum Low Output Current	5 mA
Maximum High Output Current	−5 mA
Input Clamp Current (V_I < 0 V, V_I > V_{DD})	±20 mA
Output Clamp Current (V_O < 0 V, V_O > V_{DD})	±20 mA
Operating Temperature Range	−40°C to +85°C
Storage Temperature Range	−65°C to +150°C
Lead Temperature	
Soldering (10 sec)	300°C
Vapor Phase (60 sec)	215°C
Infrared (15 sec)	220°C

Stresses above those listed under Absolute Maximum Ratings may cause permanent damage to the device. This is a stress rating only; functional operation of the device at these or any other conditions above those indicated in the operational section of this specification is not implied. Exposure to absolute maximum rating conditions for extended periods may affect device reliability.

THERMAL RESISTANCE

Table 9.

Package Type	θ_{JA}	Unit
8-Lead SOIC_N (R-8)	206	°C/W

ESD CAUTION

ESD (electrostatic discharge) sensitive device. Charged devices and circuit boards can discharge without detection. Although this product features patented or proprietary protection circuitry, damage may occur on devices subjected to high energy ESD. Therefore, proper ESD precautions should be taken to avoid performance degradation or loss of functionality.

PIN CONFIGURATION AND FUNCTION DESCRIPTIONS

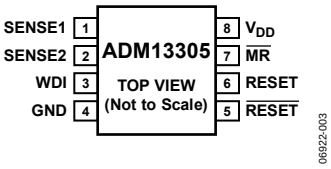

Figure 3. Pin Configuration

Table 10. Pin Function Descriptions

Pin No.	Mnemonic	Description
1	SENSE1	Sense Input Voltage 1.
2	SENSE2	Sense Input Voltage 2.
3	WDI	Watchdog Timer Input.
4	GND	Ground.
5	$\overline{\text{RESET}}$	Active-Low Reset Output.
6	RESET	Active-High Reset Output.
7	$\overline{\text{MR}}$	Manual Reset Input.
8	V_{DD}	Supply Voltage.

TYPICAL PERFORMANCE CHARACTERISTICS

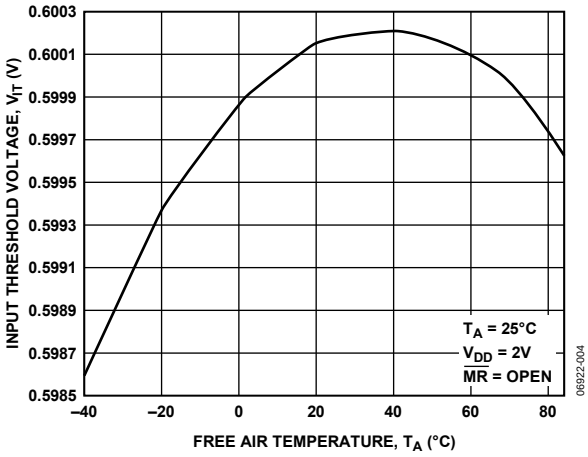

Figure 4. Sense Threshold Voltage vs. Free Air Temperature at V_{DD}

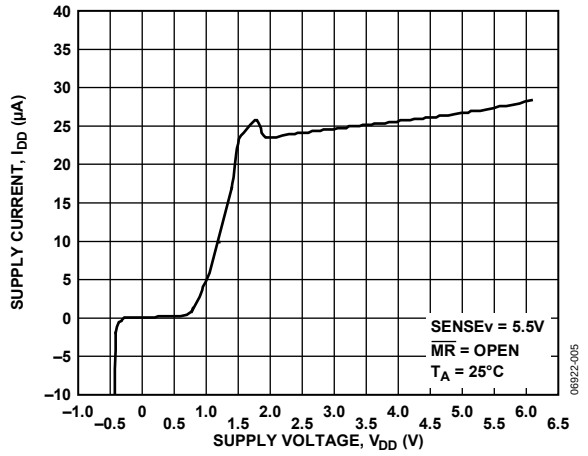

Figure 5. Supply Current vs. Supply Voltage

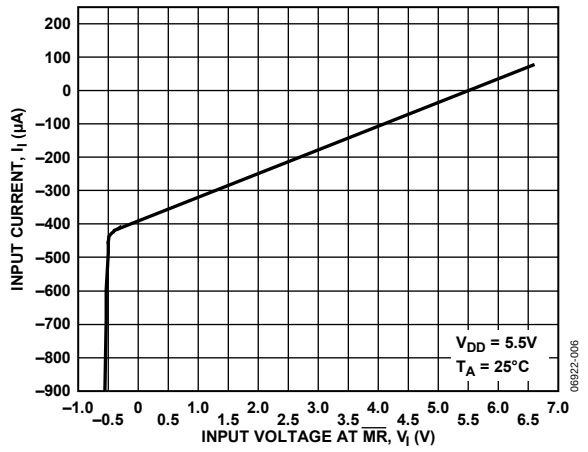

Figure 6. Input Current vs. Input Voltage at $\overline{MR}$

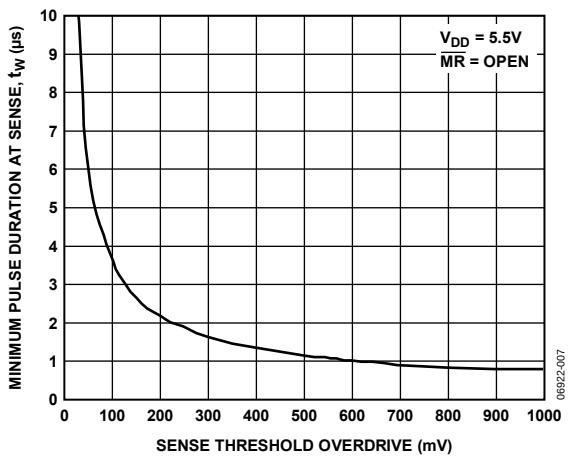

Figure 7. ADM13305-18, ADM13305-25 and ADM13305-33 Minimum Pulse Duration at SENSE vs. Sense Threshold Overdrive

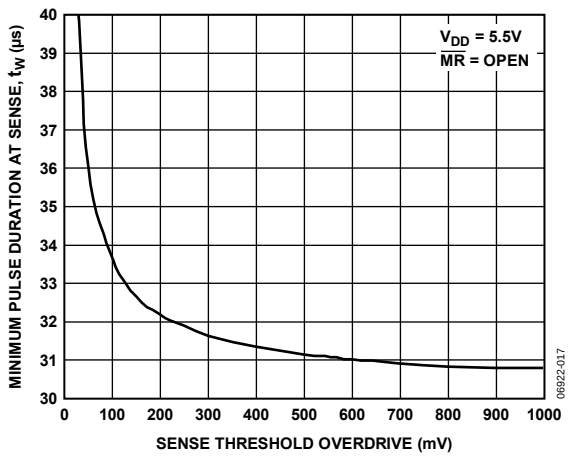

Figure 8. ADM13305-4 and ADM13305-5 Minimum Pulse Duration at SENSE vs. Sense Threshold Overdrive

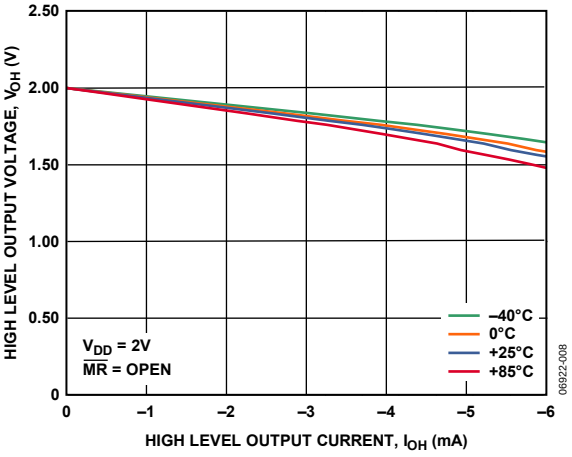

Figure 9. High Level Output Voltage vs. High Level Output Current

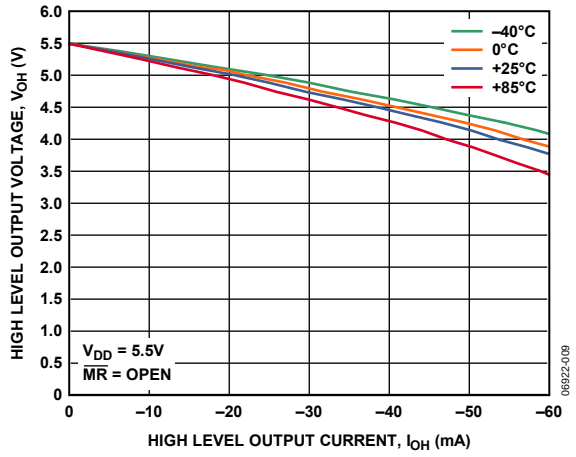

Figure 10. High Level Output Voltage vs. High Level Output Current

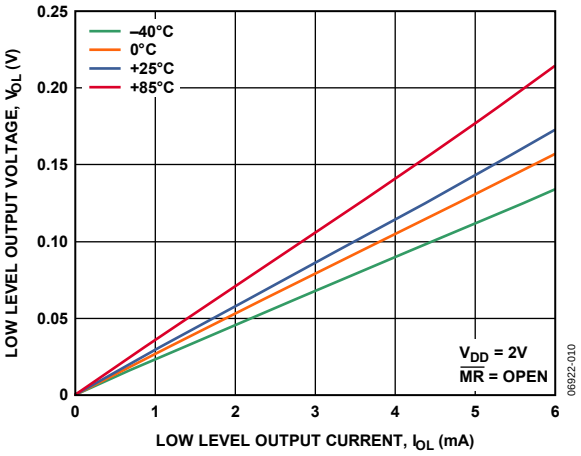

Figure 11. Low Level Output Voltage vs. Low Level Output Current

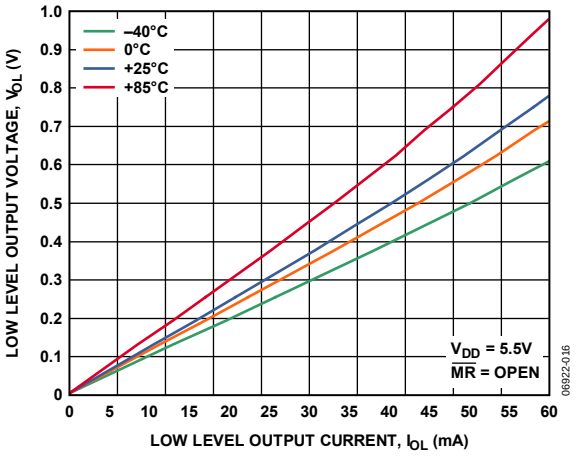

Figure 12. Low Level Output Voltage vs. Low Level Output Current

THEORY OF OPERATION

The ADM13305 is a dual voltage supervisor designed to monitor two supplies and provide a reset signal to DSP and microprocessor-based systems.

There are five models available, all of which feature a combination of internally pretrimmed undervoltage threshold options for monitoring 1.8 V, 2.5 V, 3.3 V, and 5 V supplies. There is also an adjustable input option with an undervoltage threshold of 0.6 V.

The ADM13305-18, ADM13305-25, and ADM13305-33 have two internally fixed thresholds, while the ADM13305-4 and ADM13305-5 offer one internally fixed threshold and one externally programmable threshold via a resistor string. See the Ordering Guide for a list of all available options.

INPUT CONFIGURATION

The ADM13305 is powered through V_{DD}. To increase noise immunity in noisy applications, place a 0.1 µF capacitor between the V_{DD} input and ground.

The SENSEv inputs are resistant to short power supply glitches. Do not allow an unused SENSEv input to float or to be grounded, instead connect it to a supply voltage greater than its specified threshold voltage.

Typically, the threshold voltage at each adjustable SENSEv input is 0.6 V. To monitor a voltage greater than 0.6 V, connect a resistor divider network to the device as depicted in Figure 13, where,

$$V_{MONITERED} = 0.6\ \text{V}\left(\frac{R1+R2}{R2}\right)$$

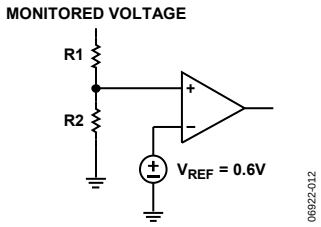

Figure 13. Setting the Adjustable Monitor

RESET OUTPUT

The reset outputs are guaranteed to be in the correct state for V_{DD} down to 1.1 V. During power-up, $\overline{\text{RESET}}$ is asserted when the supply voltage becomes greater than 1.1 V.

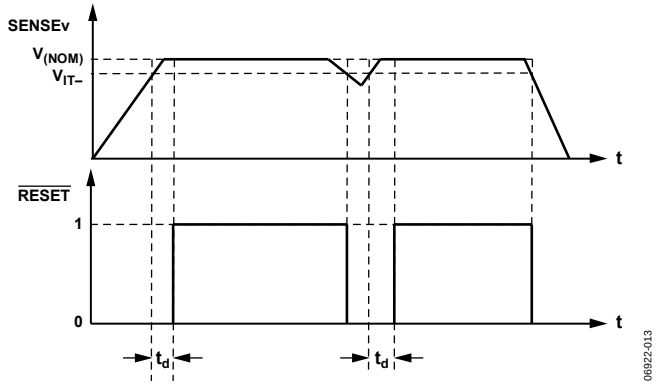

Figure 14. Reset Timing Diagram

Once the supplies monitored at the SENSEv pins rise above their associated threshold level, the $\overline{\text{RESET}}$ signal remains low for the reset timeout period before deasserting. Subsequently, if either of the supplies monitored by the SENSEv pins falls below its associated threshold the $\overline{\text{RESET}}$ output reasserts.

The ADM13305 features both an active-low, push-pull $\overline{\text{RESET}}$ output and an active-high, push-pull RESET output.

WATCHDOG TIMER

The ADM13305 features a watchdog timer that monitors microprocessor activity. A timer circuit is cleared with every low-to-high or high-to-low logic transition on the watchdog input pin (WDI). If the timer counts through the preset watchdog timeout period of 1.6 sec, $\overline{\text{RESET}}$ is asserted, as shown in Figure 15.

The microprocessor is required to toggle the WDI pin to avoid being reset. Therefore, failure of the microprocessor to toggle WDI within the timeout period indicates a code execution error and the reset pulse generated restarts the microprocessor in a known state. The watchdog timer can be disabled by leaving WDI floating.

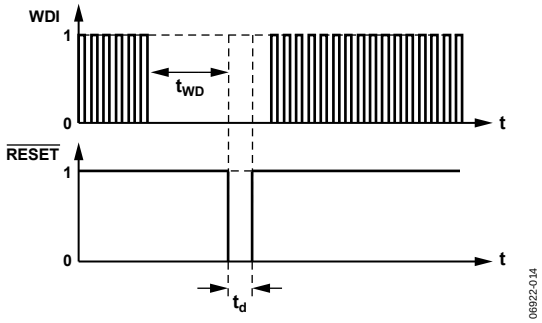

Figure 15. Watchdog Timing Diagram

MANUAL RESET ($\overline{MR}$)

The ADM13305 features a manual reset input, which when driven low, asserts the reset output, as shown in Figure 16. When $\overline{MR}$ transitions from low to high, reset remains asserted for the duration of the reset active timeout period before deasserting. An external push-button switch can be connected between $\overline{MR}$ and ground to allow the user to generate a reset.

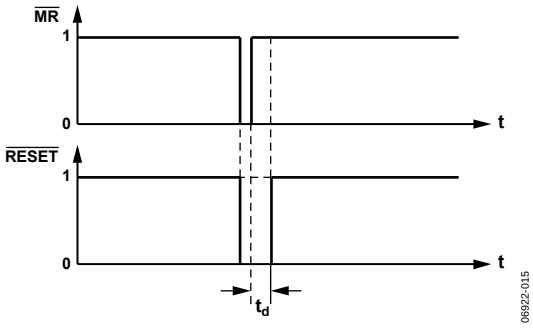

Figure 16. Manual Reset Timing Diagram

OUTLINE DIMENSIONS

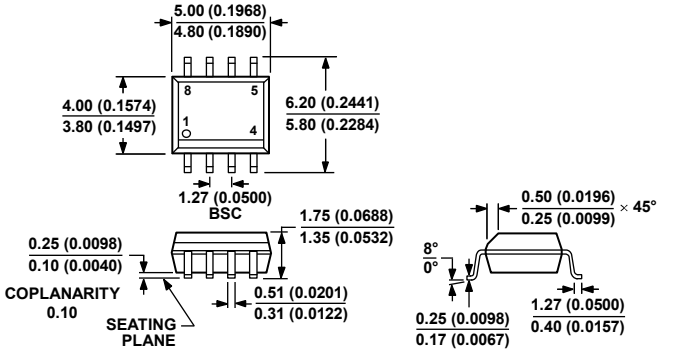

Figure 17. 8-Lead Standard Small Outline Package [SOIC_N]
Narrow Body
(R-8)
Dimensions shown in millimeters and (inches)

ORDERING GUIDE

Model	Nominal Supervised Voltage		Threshold Voltage (Typical)		Temperature Range	Package Description	Package Option
	SENSE1	SENSE2	SENSE1	SENSE2			
ADM13305-18ARZ[1]	3.3 V	1.8 V	2.93 V	1.68 V	−40°C to +85°C	8-Lead SOIC_N	R-8
ADM13305-18ARZ-RL7[1]	3.3 V	1.8 V	2.93 V	1.68 V	−40°C to +85°C	8-Lead SOIC_N	R-8
ADM13305-25ARZ[1]	3.3 V	2.5 V	2.93 V	2.25 V	−40°C to +85°C	8-Lead SOIC_N	R-8
ADM13305-25ARZ-RL7[1]	3.3 V	2.5 V	2.93 V	2.25 V	−40°C to +85°C	8-Lead SOIC_N	R-8
ADM13305-33ARZ[1]	5 V	3.3 V	4.55 V	2.93 V	−40°C to +85°C	8-Lead SOIC_N	R-8
ADM13305-33ARZ-RL7[1]	5 V	3.3 V	4.55 V	2.93 V	−40°C to +85°C	8-Lead SOIC_N	R-8
ADM13305-4ARZ[1]	3.3 V	Adjustable[2]	2.93 V	0.6 V	−40°C to +85°C	8-Lead SOIC_N	R-8
ADM13305-4ARZ-RL7[1]	3.3 V	Adjustable[2]	2.93 V	0.6 V	−40°C to +85°C	8-Lead SOIC_N	R-8
ADM13305-5ARZ[1]	2.5 V	Adjustable[2]	2.25 V	0.6 V	−40°C to +85°C	8-Lead SOIC_N	R-8
ADM13305-5ARZ-RL7[1]	2.5 V	Adjustable[2]	2.25 V	0.6 V	−40°C to +85°C	8-Lead SOIC_N	R-8

[1] Z = RoHS Compliant Part.
[2] 0.6 V adjustable. External resistor divider determines the actual sense voltage.

©2007 Analog Devices, Inc. All rights reserved. Trademarks and registered trademarks are the property of their respective owners.
D06922-0-8/07(0)